EG&G ORTEC

Model 456H
High Voltage Power Supply
Operating and Service Manual

ATTENTION

THIS MANUAL MAY NOT CORRESPOND EXACTLY TO ALL REVISION LEVELS OF THIS INSTRUMENT.

Model 456H
High Voltage Power Supply
Operating and Service Manual

This manual applies to instruments marked
"Rev 08" on rear panel

WARNING

This equipment generates, uses and can radiate radio frequency energy, and if not installed and used in accordance with the instruction manual, may cause interference to radio communications. As temporarily permitted by regulation it has not been tested for compliance with the limits for Class A computing devices pursuant to Subpart J of Part 15 of FCC Rules, which are designed to provide reasonable protection against such interference. Operation of this equipment in a residential area is likely to cause interference, in which case the user, at his own expense, will be required to take whatever measures may be required to correct the interference.

Printed in U.S.A.

1502 0.5C 0283

CONTENTS

	Page
WARRANTY	ii
PHOTOGRAPHS	iv
1. DESCRIPTION	1
2. SPECIFICATIONS	1
2.1. Performance	1
2.2. Controls	1
2.3. Inputs	1
2.4. Outputs	2
2.5. Indicator	2
2.6. Electrical and Mechanical	2
2.7. Accessories Available	2
2.8. Related Equipment	2
3. INSTALLATION	2
3.1. General	2
3.2. Connection to Power	2
3.3. Connecting into a System	2
3.4. Connecting an External Reference Input	3
4. CIRCUIT DESCRIPTION	3
5. CORRECTIVE MAINTENANCE	4
5.1. General	4
5.2. Troubleshooting Suggestions	4

ILLUSTRATION

Fig. 4.1. Simplified Block Diagram of ORTEC 456H	3

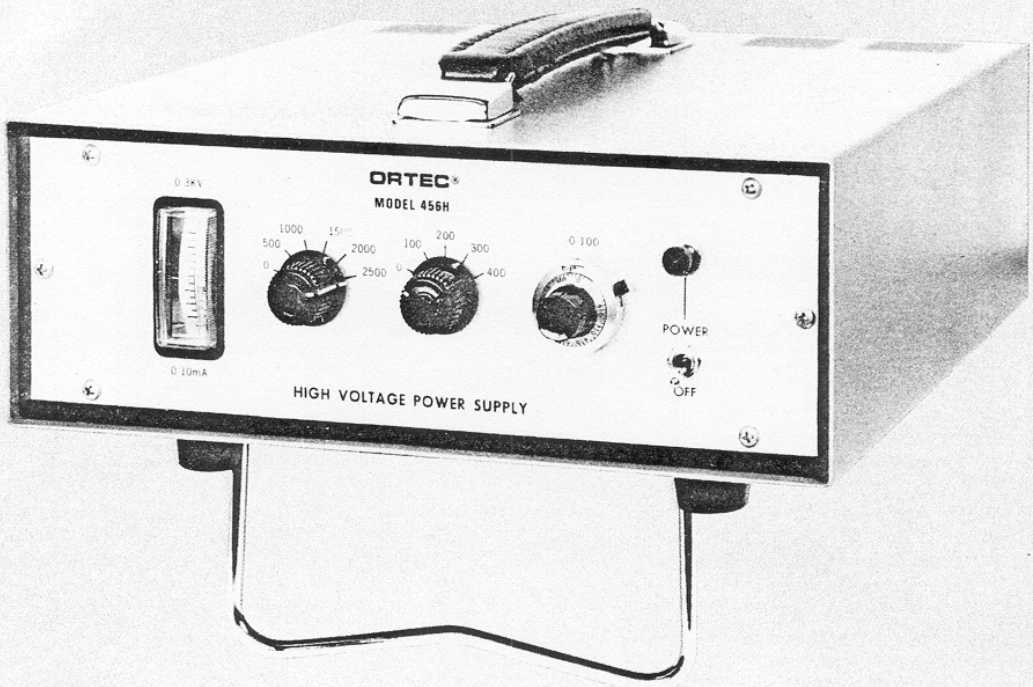
ORTEC
MODEL 456H
0-3KV
0-10mA
500
1000
1500
2000
2500
0
100
200
300
400
0-100
POWER
OFF
HIGH VOLTAGE POWER SUPPLY

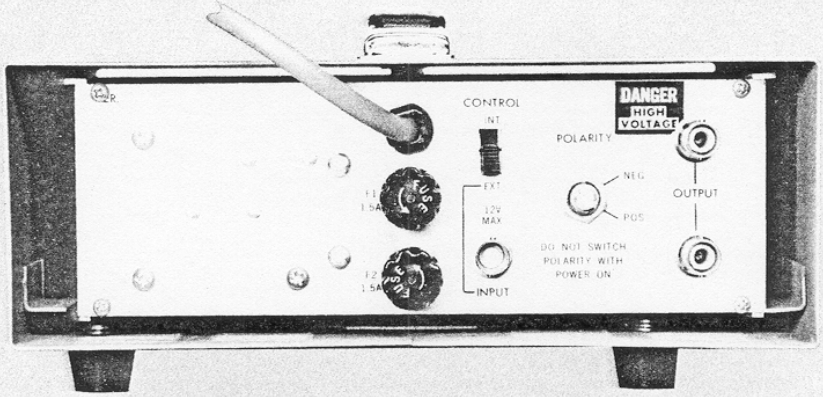
CONTROL
INT
EXT
12V MAX
INPUT
DANGER
HIGH VOLTAGE
POLARITY
NEG
POS
OUTPUT
DO NOT SWITCH POLARITY WITH POWER ON
FUSE
1.5A

ORTEC 456H HIGH VOLTAGE POWER SUPPLY

1. DESCRIPTION

The ORTEC 456H High Voltage Power Supply is a self-contained instrument that provides either polarity of output voltage from 50 to 3000 V, 0 to 10 mA. The adjusted output voltage of the selected polarity is available simultaneously through two SHV rear-panel connectors. An internal slide switch permits operation on either 115- or 230-V ac input power, furnished through a power line cord and connector; both sides of the input power line are fused in the 456H.

The 456H features a front-panel indicating meter, nominal 16-kHz internal oscillator frequency, optional external regulation for stabilizer applications, and low-noise output. It provides the well-regulated and highly stable voltage that is required for proper operation of photomultiplier tubes, ionization chambers, and lithium-drifted semiconductor detectors.

WARNING

This instrument produces voltages that can be hazardous. Always switch power off and wait for the meter to return to center-scale zero before connecting or removing cables and before changing the output polarity.

2. SPECIFICATIONS

2.1. PERFORMANCE

Output Polarity Positive or negative, selected by switch on rear panel.

Output Range 50 to 3000 V; min usable voltage 10 V.

Output Load Capacity 0 to 10 mA.

Regulation ≤0.0025% variation in output voltage for combined line and load variations within operating range at constant ambient temperature.

Temperature Stability ≤±50 ppm/°C after 30 min warmup, operating range 0 to 50°C.

Long-Term Drift <0.01%/hr and <0.03%/24-hr variation in output voltage at constant input line voltage, load, and ambient temperature after 30 min warmup.

Output Ripple <15 mV peak to peak, 5 Hz to 5 MHz.

Overload Protection Built-in overload and short-circuit protection with max output current limit of ≈12 mA. Overload is indicated by low-frequency oscillations on front-panel meter.

2.2. CONTROLS

Power Off Toggle switch on front panel is used to energize unit when power cord is plugged into an appropriate source, and an adjacent indicator lamp shows when power is applied to the 456H.

Output Level One 6-position switch, one 5-position switch, and a 10-turn precision potentiometer; output level is sum of the 3 selections ±0.25%.

Polarity A rear-panel switch selects either Positive or Negative output polarity.

Control A slide switch on the rear panel selects the reference source for the output voltage.
Int Selects the internal reference source; the front-panel controls select the output amplitude, and the rear-panel switch is used to select either polarity.
Ext Selects the external reference source; output voltage is proportional to reference input.

2.3. INPUTS

ac Power Line 103-129 V or 206-258 V, 47-65 Hz, 50 W nom; power supplied through 3-wire captive line cord with

standard NEMA connector; both sides of line are fused in the 456H.

External Control Full range of output voltage can be based on an external reference level furnished through a rear-panel BNC connector; control voltage range is 0 through ~±9 V dc; this input protected by a nominal 9-V zener.

2.4. OUTPUTS

Regulated dc Output The adjusted and regulated voltage, with selected polarity, is furnished simultaneously to both SHV connectors on rear panel.

2.5. INDICATOR

Meter A front-panel zero-center indicating meter shows the polarity and approximate amplitude of the adjusted output voltage.

2.6. ELECTRICAL AND MECHANICAL

Dimensions 4.5 x 8.8 x 11.5 in. overall.

Power Requirements 115 or 230 V 47-65 Hz, 50 W nom; no dc power requirements.

Weight (Shipping) 10 lb (4.5 kg).

Weight (Net) 8 lb (3.6 kg).

2.7. ACCESSORIES AVAILABLE

Standard ORTEC 12-ft long adapter cables are available for the SHV output connectors to accommodate the high voltage input connector on the preamplifier or detector, or other accessory that is to have the output power level applied.

ORTEC C-36-12 SHV to SHV 75Ω Cable Assembly
ORTEC C-35-12 SHV to Kings KV-59-22 75Ω Cable Assembly
ORTEC C-34-12 SHV to MHV 75Ω Cable Assembly

2.8. RELATED EQUIPMENT

Each of the two outputs of the 456H can be used as a power source for any application that is within the operating limits of the power supply. Both output levels are identical and of the same polarity. The load on the 456H output circuit is the sum of the individual loads connected to both output connectors.

This power supply is ideal for use with either one detector or a pair of detectors where the voltage level requirements are the same for both detectors. The appropriate types of detectors for which the 456H is designed include scintillation, ionization chambers, and lithium-drifted semiconductor detectors.

3. INSTALLATION

3.1. GENERAL

The 456H is in an enclosure that protects the operator from contacting any of the dangerous internal voltages that may be produced with it. A convenient folded handle is mounted on the top of the case and can be used to move the instrument while power is on. The unit can be placed at any convenient location, and a folding support on the bottom of the case permits it to be placed in a tilted position for easier manipulation of the front panel controls and better viewing of the monitor meter during operation. The 456H should not be subjected to temperatures in excess of 50°C (120°F).

3.2. CONNECTION TO POWER

The 456H contains all required power supplies to operate and receives input power by way of a 3-wire captive line cord with a standard NEMA male connector when connected to a suitable source. An internal slide switch permits the selection of the proper input circuit for either 115- or 230-V ac nominal power input. This power supply is totally self-contained. However, precautions should be taken to ensure that personnel know of the shock hazard at the rear connectors, and air space should be provided above and below the instrument.

3.3. CONNECTING INTO A SYSTEM

1. Check to see that the power switch is in the Off position.

2. Plug the ac power cord into the appropriate receptacle.

3. Check the polarity switch on the rear panel and set it for either positive or negative output polarity as required for the application.

4. Connect a high-voltage cable from either output connector on the 456H to the instrument to be powered. Use the other output connector if a second instrument is to be operated at the same output voltage.

5. Set the front-panel selector switches and potentiometer for the desired voltage level. This is normally specified with the instruments to which the voltage is to be applied. The adjusted output voltage will be the sum of the settings of all three controls.

6. Turn on the power with the toggle switch on the front panel. The indicator lamp next to the switch will light to show that input power is being applied. The indicating meter at the top of the front panel will also deflect to show both the polarity and the amplitude of the adjusted output voltage.

3.4. CONNECTING AN EXTERNAL REFERENCE INPUT

An output voltage level can be controlled by an external reference level that is furnished through the rear-panel BNC connector when the Control slide switch is set at Ext. The range of input voltage is 0 to ~9 V to provide an output level to 3000 V. The front-panel voltage level controls are ineffective for external reference operation.

For positive output set the polarity selector switch on the rear panel at Positive, and the external reference should be positive. For negative output set the polarity switch at Negative, and the external reference should be negative. The external reference voltage should be stable and filtered since the output is linearly proportional to this reference. The external reference should be capable of driving the 47 kΩ input impedance.

4. CIRCUIT DESCRIPTION

Figure 4.1 is a simplified block diagram of the 456H circuits. A schematic, 456-0101-S1, is included at the back of the manual.

The 456H requires an ac power input, regardless of the use of an internal or an external reference level. The selected reference level is applied to a precision regulator and controls the low voltage input level to an internal nominal 16 kHz oscillator. The oscillator output voltage is stepped up for the high voltage output through a converter transformer, and this is rectified and filtered to produce the output to each output connector.

The front-panel indicating meter is connected to the output connectors and monitors the voltage present at these connectors. This is an excellent safety feature since it indicates whenever there is a voltage present at the connectors, as well as the output polarity and the approximate level.

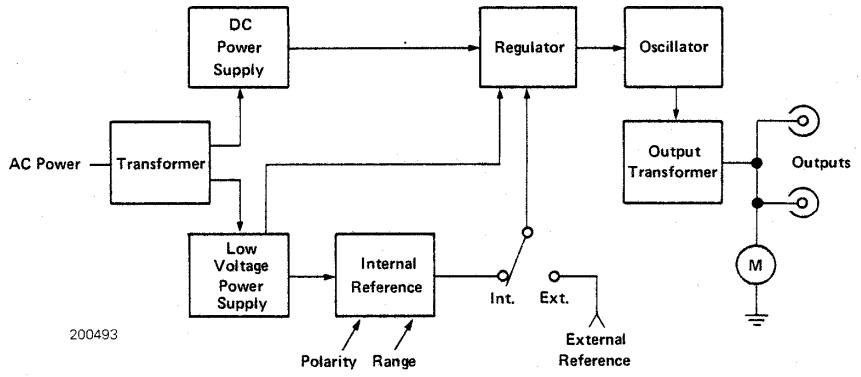

Fig. 4.1. Simplified Block Diagram of ORTEC 456H.

5. CORRECTIVE MAINTENANCE

5.1. GENERAL

These units should rarely require more than cleaning to prevent leakage paths from being created by dust collection. If an apparent malfunction is noted, it is important to determine if it is within the High Voltage power supply by disconnecting it from its position in a circuit and performing routine diagnostic tests with a voltmeter and oscilloscope. The power supply is short-circuit protected, and under a short circuit the output voltage will drop to zero. If an external short circuit has been applied to the output, the short circuit must be removed before the power supply will again produce its adjusted full voltage. If this supply is operating at or near rated output current when short circuit occurs, it may be necessary to lower voltage setting to allow supply to recover properly.

5.2. TROUBLESHOOTING SUGGESTIONS

Troubleshooting procedures for this power supply should consist of simply removing the output loads and measuring the output voltage, and then applying a load and monitoring the output voltage again to see whether the output voltage is regulated. Internal dc measurements may be performed in the field since typical dc voltages are indicated in the schematic diagram. Be cautious when measuring voltage within this power supply, because of the personnel hazard associated with the high voltages. The 456H, or any other standard ORTEC product, may be returned to the factory for repair service at any time for a nominal cost. Our standard procedures for repair include the same extensive quality control tests that a new instrument receives.

Some possible problems are given that may occur in an ORTEC 456H High Voltage Power Supply, together with one or more possible causes for each of these problems.

Problem
Blows input fuses
Possible Causes
Check internal 115/230 switch.
Oscillator stopped.
Q101 or Q102 shorted.
D101 defective.
One or more of the following capacitors shorted: C101, C102, C201, C203.

Problem
No output with Control switch set at Ext.
Possible Causes
Q103 open.
Q104 open.
No reference voltage input.
Q101 or Q102 open.

Problem
Output ok at high setting, but does not drop properly when controls are set to zero.
Possible Causes
Leaky Q104.

Problem
Output ok at low setting, but will not increase to high levels.
Possible Causes
D206 or D207 defective. Q101 or Q102 defective. Low reference voltage.

Problem
Output oscillates at a low frequency.
Possible Causes
Supply is overloaded.

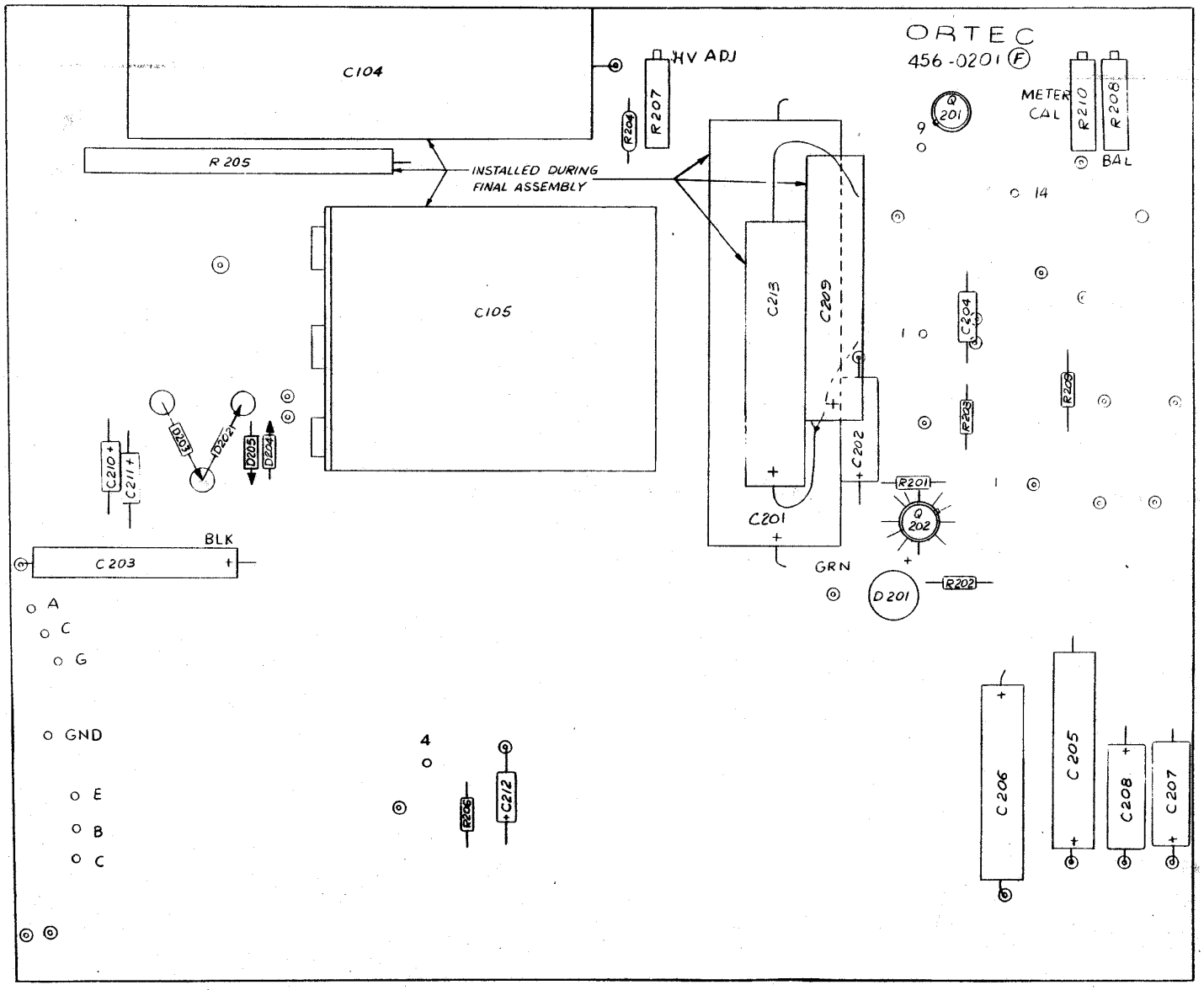
ORTEC
456-0201 (F)
C104
HV ADJ
R207
R204
R205
INSTALLED DURING
FINAL ASSEMBLY
C105
C213
C209
C202
C201
Q201
METER
CAL
R210
R208
BAL
9
14
C204
R203
R209
R201
Q202
R202
D201
GRN
BLK
C203
C210
C211
D203
D202
D205
D204
A
C
G
GND
E
B
C
4
R206
C212
C206
C205
C208
C207

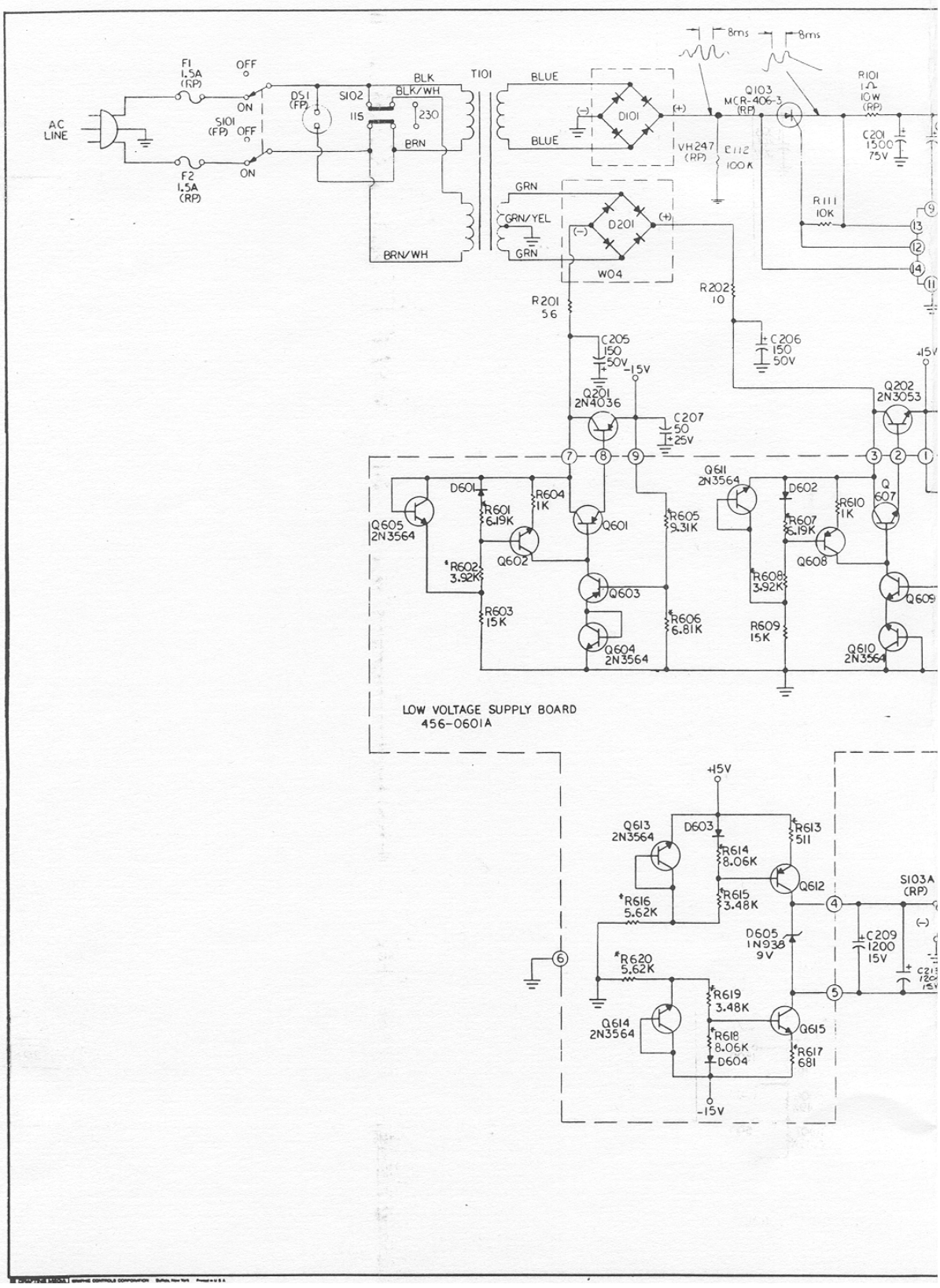
8ms
8ms
F1
1.5A
(RP)
OFF
ON
AC
LINE
S101
(FP)
OFF
F2
1.5A
(RP)
ON
DS1
(FP)
S102
115
230
BLK
BLK/WH
BRN
BRN/WH
T101
BLUE
BLUE
D101
Q103
MCR-406-3
(RP)
R101
1Ω
10W
(RP)
C201
1500
75V
VH247
(RP)
R112
100K
R111
10K
GRN
GRN/YEL
GRN
D201
W04
R201
56
R202
10
C205
150
50V
C206
150
50V
-15V
+15V
Q201
2N4036
C207
50
25V
Q202
2N3053
D601
R601
6.19K
R604
1K
R605
9.31K
Q601
Q605
2N3564
Q602
R602
3.92K
Q603
R603
15K
R606
6.81K
Q604
2N3564
Q611
2N3564
D602
R610
1K
Q
607
R607
6.19K
Q608
R608
3.92K
Q609
R609
15K
Q610
2N3564
LOW VOLTAGE SUPPLY BOARD
456-0601A
+15V
Q613
2N3564
D603
R613
511
R614
8.06K
Q612
R615
3.48K
R616
5.62K
S103A
(RP)
D605
1N938
9V
C209
1200
15V
R620
5.62K
R619
3.48K
Q614
2N3564
Q615
R618
8.06K
D604
R617
681
-15V

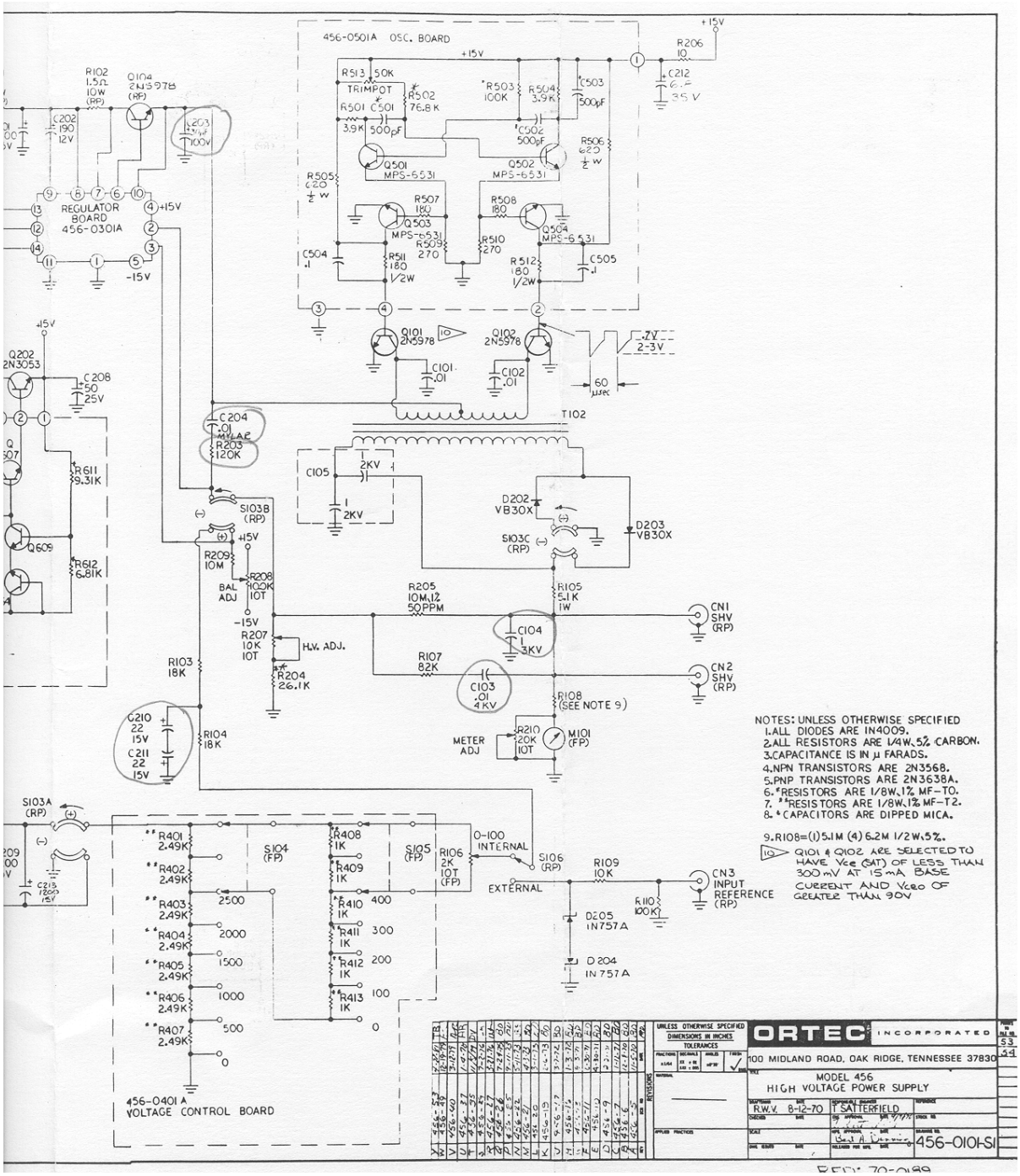
456-0501A OSC. BOARD
+15V
R206 10
C212 6.2 35V
R513 50K TRIMPOT
R502 76.8K
R501 3.9K
C501 500pF
R503 100K
R504 3.9K
C503 500pF
C502 500pF
R506 620 ½W
Q501 MPS-6531
Q502 MPS-6531
R505 620 ½W
R507 180
R508 180
Q503 MPS-6531
Q504 MPS-6531
R509 270
R510 270
C504 .1
R511 180 1/2W
R512 180 1/2W
C505 .1
Q101 2N5978
Q102 2N5978
C101 .01
C102 .01
.7V
2-3V
60 μsec
T102
R102 1.5Ω 10W (RP)
Q104 2N5978 (RP)
C202 190 12V
C203 100V
REGULATOR BOARD 456-0301A
+15V
-15V
Q202 2N3053
C208 50 25V
R611 9.31K
Q609
R612 6.81K
C204 .01 MYLAR
R203 120K
C105 1 2KV
1 2KV
D202 VB30X
D203 VB30X
S103C (RP)
S103B (RP)
R209 10M
R208 100K 10T
BAL ADJ
R205 10M,1Z 50PPM
R105 5.1K 1W
CN1 SHV (RP)
C104 3KV
R207 10K 10T
H.V. ADJ.
R204 26.1K
R103 18K
R107 82K
CN2 SHV (RP)
C103 .01 4KV
R108 (SEE NOTE 9)
C210 22 15V
C211 22 15V
R104 18K
R210 20K 10T
METER ADJ
M101 (FP)
S103A (RP)
C213 1800 15V
R401 2.49K
R402 2.49K
R403 2.49K
R404 2.49K
R405 2.49K
R406 2.49K
R407 2.49K
2500
2000
1500
1000
500
0
S104 (FP)
R408 1K
R409 1K
R410 1K
R411 1K
R412 1K
R413 1K
400
300
200
100
0
S105 (FP)
R106 2K 10T (FP)
0-100 INTERNAL
EXTERNAL
S106 (RP)
R109 10K
R110 100K
CN3 INPUT REFERENCE (RP)
D205 IN757A
D204 IN757A
456-0401A VOLTAGE CONTROL BOARD
NOTES: UNLESS OTHERWISE SPECIFIED
1. ALL DIODES ARE IN4009.
2. ALL RESISTORS ARE 1/4W, 5% CARBON.
3. CAPACITANCE IS IN μ FARADS.
4. NPN TRANSISTORS ARE 2N3568.
5. PNP TRANSISTORS ARE 2N3638A.
6. * RESISTORS ARE 1/8W, 1% MF-T0.
7. ** RESISTORS ARE 1/8W, 1% MF-T2.
8. ‡ CAPACITORS ARE DIPPED MICA.
9. R108=(1) 5.1M (4) 6.2M 1/2W, 5%.
10. Q101 & Q102 ARE SELECTED TO HAVE Vce (SAT) OF LESS THAN 300 mV AT 15 mA BASE CURRENT AND Vceo OF GREATER THAN 90V
UNLESS OTHERWISE SPECIFIED DIMENSIONS IN INCHES TOLERANCES
ORTEC INCORPORATED
100 MIDLAND ROAD, OAK RIDGE, TENNESSEE 37830
MODEL 456
HIGH VOLTAGE POWER SUPPLY
R.W.V. 8-12-70
T SATTERFIELD
456-0101-SI
REV. 70-0199

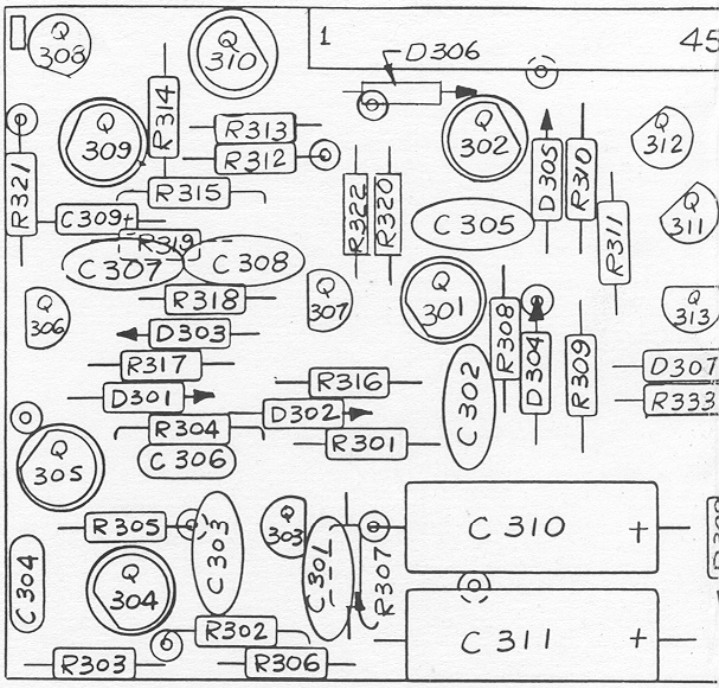

CRAFTING MEDIA GRAPHIC CONTROLS CORPORATION Buffalo, New York Printed in U.S.A.

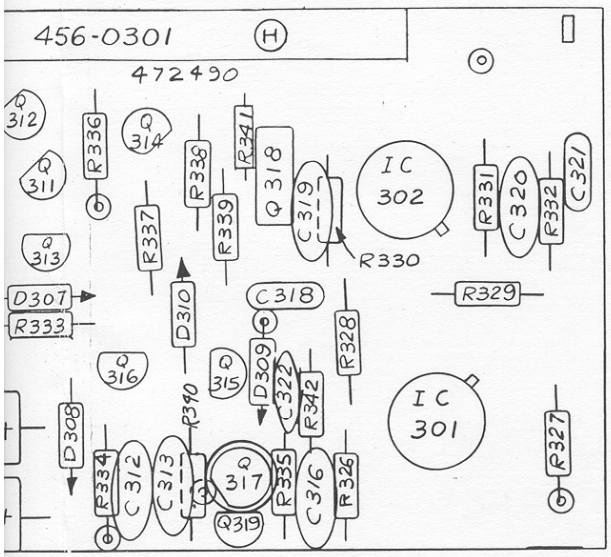

PARTIAL REAR VIEW

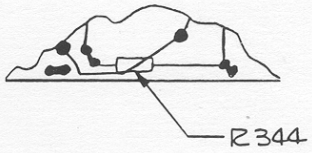

REV	ECN NO	DATE	APR.
K	456-58	9-10-82	WH
J	456-56	2-4-82	WH
H	456-53	5-1-81	TS
G	456-40	3-12-79	AR
F	456-37	1-4-78	AR
E	456-20	6-18-72	BD
D	456-14	9-25-71	BD
C	ECN 456-13	8-3-71	BD
B	GC-64	2-11-71	BD
A	GC-48	9-2-70	BD

REVISIONS

UNLESS OTHERWISE SPECIFIED
DIMENSIONS IN INCHES
TOLERANCES

FRACTIONS	DECIMALS	ANGLES	FINISH
±1/64	.XX ±.01 .XXX ±.005	±0°30'	✓ RMS

MATERIAL

APPLIED PRACTICES

ORTEC INCORPORATED

100 MIDLAND ROAD, OAK RIDGE, TENNESSEE 37830

TITLE
MODEL 456
P.C. BOARD LAYOUT

DRAFTSMAN DATE: D.NOE 7-31-70	RESPONSIBLE ENGINEER: T. SATTERFIED	REFERENCE	
CHECKED DATE	ENG. APPROVAL DATE	STOCK NO.	
SCALE: 2:1	MFG. APPROVAL DATE: B Dunn 8-3-70	DRAWING NO.: 456-0300	
DWG. ISSUED DATE: Shirley 9.30.71	RELEASED FOR MFG. DATE		

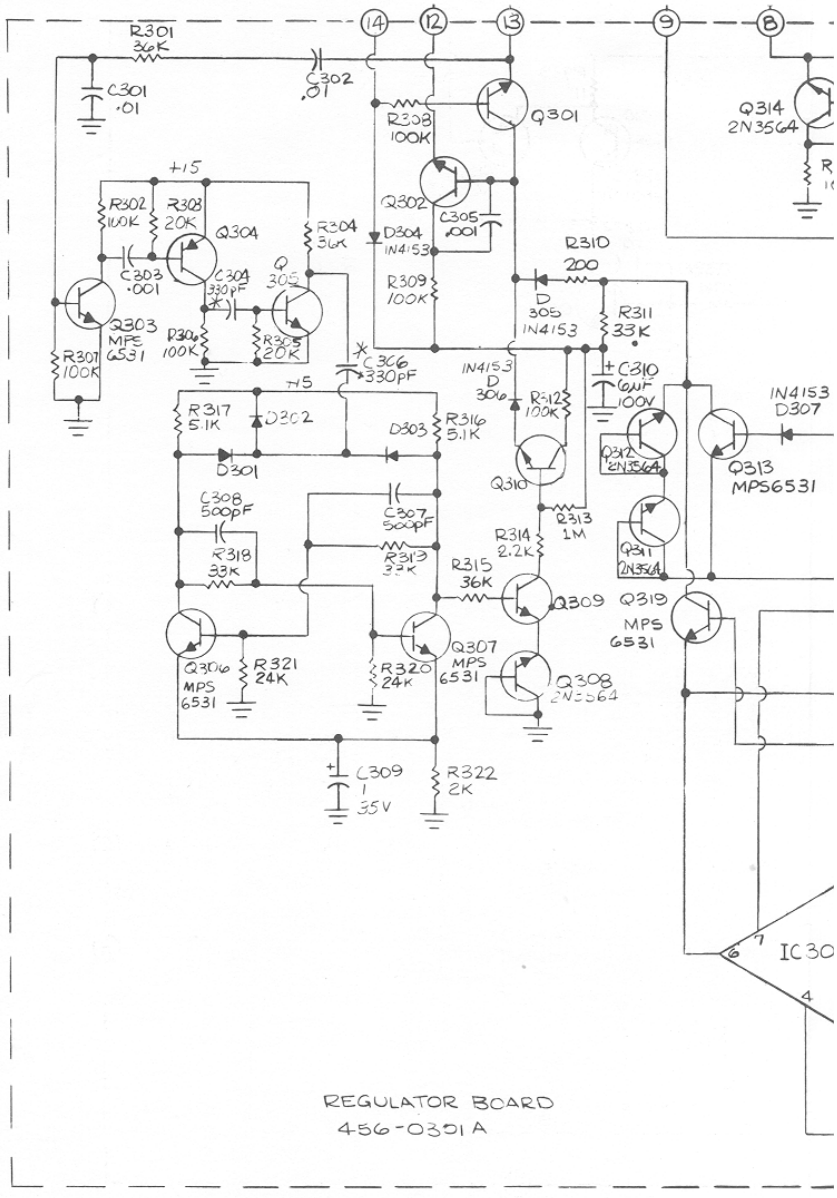

REGULATOR BOARD
456-0301A

R344
C321
D310
Q319
IC302

DRAFTING MEDIA GRAPHIC CONTROLS CORPORATION Buffalo, New York Printed in U.S.A.

NOTES: UNLESS OTHERWISE SPECIFIED
1. ALL DIODES ARE 1N4009
2. ALL RESISTORS ARE 1/4 W 5% CARBON
3. CAPACITANCE IS IN μ FARADS
4. NPN TRANSISTORS ARE 2N3568
5. PNP TRANSISTORS ARE 2N3638A
6. * CAPACITORS ARE DIPPED MICA

C-313
C-316
C-318
C-319
C-320
C-321
C-322

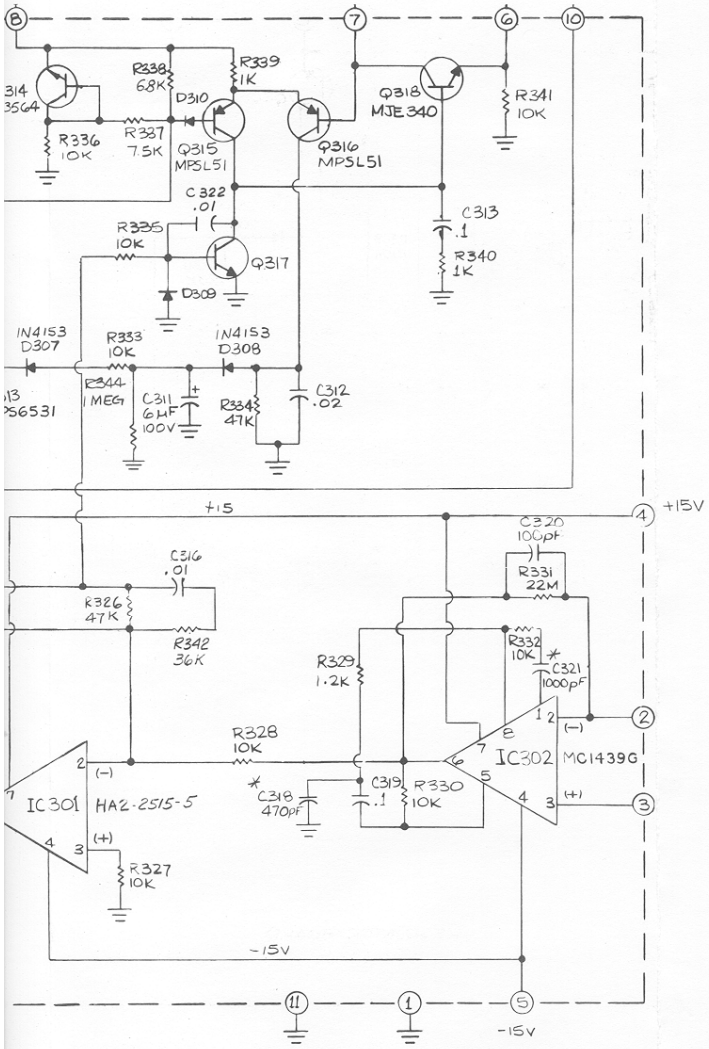

REV	ECN NO	DATE	APP.
K	456-56	7-14-81	WH
J	456-53	4-20-81	LB
H	456-40	3-12-79	AR
G	456-37	1-4-78	AR
F	456-20	3-1-73	BD
E	456-18	9-21-72	BD
D	456-14	9-25-71	BD
C	456-13	8-3-71	BD
B	456-11	6-30-71	BD
A	456-1	9-15-70	BD

REVISIONS

UNLESS OTHERWISE SPECIFIED
DIMENSIONS IN INCHES
TOLERANCES

FRACTIONS	DECIMALS	ANGLES	FINISH
±1/64	.XX ±.01 .XXX ±.005	±0°30'	✓ RMS

MATERIAL ~

APPLIED PRACTICES

ORTEC INCORPORATED

100 MIDLAND ROAD, OAK RIDGE, TENNESSEE 37830

TITLE: MODEL 456 REGULATOR BOARD

DRAFTSMAN	DATE	RESPONSIBLE ENGINEER	REFERENCE
DC	8-4-70	T. SATTERFIELD	456-0101-S1
CHECKED	DATE	ENG. APPROVAL / DATE 8-4-70	STOCK NO.
SCALE ~		MFG. APPROVAL / DATE 8-19-70	DRAWING NO.
DWG. ISSUED / DATE		RELEASED FOR MFG. / DATE	456-0301-S1