Model 419
Precision Pulse Generator
Operating and Service Manual

Printed in U.S.A.

ORTEC® Part No. 733180
Manual Revision C

1202

Advanced Measurement Technology, Inc.
a/k/a/ ORTEC®, a subsidiary of AMETEK®, Inc.

WARRANTY

ORTEC* warrants that the items will be delivered free from defects in material or workmanship. ORTEC makes no other warranties, express or implied, and specifically NO WARRANTY OF MERCHANTABILITY OR FITNESS FOR A PARTICULAR PURPOSE.

ORTEC's exclusive liability is limited to repairing or replacing at ORTEC's option, items found by ORTEC to be defective in workmanship or materials within one year from the date of delivery. ORTEC's liability on any claim of any kind, including negligence, loss, or damages arising out of, connected with, or from the performance or breach thereof, or from the manufacture, sale, delivery, resale, repair, or use of any item or services covered by this agreement or purchase order, shall in no case exceed the price allocable to the item or service furnished or any part thereof that gives rise to the claim. In the event ORTEC fails to manufacture or deliver items called for in this agreement or purchase order, ORTEC's exclusive liability and buyer's exclusive remedy shall be release of the buyer from the obligation to pay the purchase price. In no event shall ORTEC be liable for special or consequential damages.

Quality Control

Before being approved for shipment, each ORTEC instrument must pass a stringent set of quality control tests designed to expose any flaws in materials or workmanship. Permanent records of these tests are maintained for use in warranty repair and as a source of statistical information for design improvements.

Repair Service

If it becomes necessary to return this instrument for repair, it is essential that Customer Services be contacted in advance of its return so that a Return Authorization Number can be assigned to the unit. Also, ORTEC must be informed, either in writing, by telephone [(865) 482-4411] or by facsimile transmission [(865) 483-2133], of the nature of the fault of the instrument being returned and of the model, serial, and revision ("Rev" on rear panel) numbers. Failure to do so may cause unnecessary delays in getting the unit repaired. The ORTEC standard procedure requires that instruments returned for repair pass the same quality control tests that are used for new-production instruments. Instruments that are returned should be packed so that they will withstand normal transit handling and must be shipped PREPAID via Air Parcel Post or United Parcel Service to the designated ORTEC repair center. The address label and the package should include the Return Authorization Number assigned. Instruments being returned that are damaged in transit due to inadequate packing will be repaired at the sender's expense, and it will be the sender's responsibility to make claim with the shipper. Instruments not in warranty should follow the same procedure and ORTEC will provide a quotation.

Damage in Transit

Shipments should be examined immediately upon receipt for evidence of external or concealed damage. The carrier making delivery should be notified immediately of any such damage, since the carrier is normally liable for damage in shipment. Packing materials, waybills, and other such documentation should be preserved in order to establish claims. After such notification to the carrier, please notify ORTEC of the circumstances so that assistance can be provided in making damage claims and in providing replacement equipment, if necessary.

Copyright © 2002, Advanced Measurement Technology, Inc. All rights reserved.

*ORTEC® is a registered trademark of Advanced Measurement Technology, Inc. All other trademarks used herein are the property of their respective owners.

CONTENTS

WARRANTY ii

SAFETY INSTRUCTIONS AND SYMBOLS iv

SAFETY WARNINGS AND CLEANING INSTRUCTIONS v

1. DESCRIPTION 1
   1.1. GENERAL 1
   1.2. BASIC FUNCTION 1

2. SPECIFICATIONS 2

3. INSTALLATION 3
   3.1. GENERAL 3
   3.2. CONNECTION TO POWER 3
   3.3. USE OF EXTERNAL REFERENCE VOLTAGE - EXTERNAL/INTERNAL REFERENCE SWITCH 3
   3.4. LINEAR OUTPUT SIGNAL CONNECTIONS AND TERMINATING IMPEDANCE CONSIDERATIONS 3

4. OPERATING INSTRUCTIONS 4
   4.1. PANEL CONTROLS 4
   4.2. CONNECTOR DATA 5
   4.3. TYPICAL OPERATING CONSIDERATIONS 5

5. MAINTENANCE 10
   5.1. TESTING PERFORMANCE OF THE PULSE GENERATOR 10
   5.2. ADJUSTMENT OF INTERNAL OSCILLATOR FREQUENCY 11
   5.3. ADJUSTMENT OF DECAY TIME OF OUTPUT PULSE 11
   5.4. TABULATED TEST POINT VOLTAGES 12
   5.5. SUGGESTIONS FOR TROUBLESHOOTING 12

SAFETY INSTRUCTIONS AND SYMBOLS

This manual contains up to three levels of safety instructions that must be observed in order to avoid personal injury and/or damage to equipment or other property. These are:

DANGER Indicates a hazard that could result in death or serious bodily harm if the safety instruction is not observed.

WARNING Indicates a hazard that could result in bodily harm if the safety instruction is not observed.

CAUTION Indicates a hazard that could result in property damage if the safety instruction is not observed.

Please read all safety instructions carefully and make sure you understand them fully before attempting to use this product.

In addition, the following symbol may appear on the product:

ATTENTION–Refer to Manual

DANGER–High Voltage

Please read all safety instructions carefully and make sure you understand them fully before attempting to use this product.

SAFETY WARNINGS AND CLEANING INSTRUCTIONS

DANGER	Opening the cover of this instrument is likely to expose dangerous voltages. Disconnect the instrument from all voltage sources while it is being opened.

WARNING	Using this instrument in a manner not specified by the manufacturer may impair the protection provided by the instrument.

Cleaning Instructions

To clean the instrument exterior:

- Unplug the instrument from the ac power supply.
- Remove loose dust on the outside of the instrument with a lint-free cloth.
- Remove remaining dirt with a lint-free cloth dampened in a general-purpose detergent and water solution. Do not use abrasive cleaners.

CAUTION	To prevent moisture inside of the instrument during external cleaning, use only enough liquid to dampen the cloth or applicator.

- Allow the instrument to dry completely before reconnecting it to the power source.

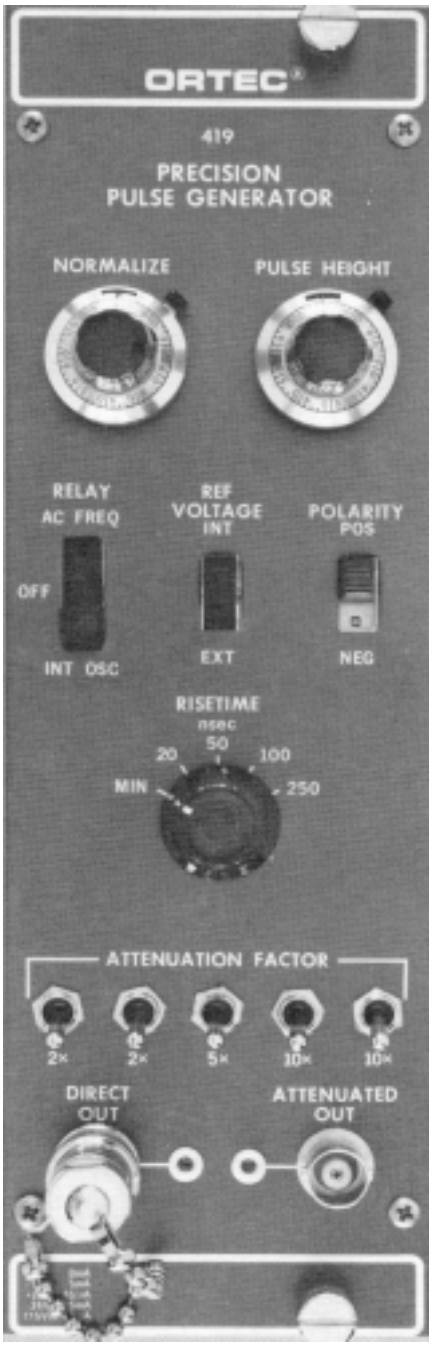
ORTEC
419
PRECISION
PULSE GENERATOR
NORMALIZE
PULSE HEIGHT
RELAY
AC FREQ
REF
VOLTAGE
INT
POLARITY
POS
OFF
INT OSC
EXT
NEG
RISETIME
nsec
20
50
100
MIN
250
ATTENUATION FACTOR
2×
2×
5×
10×
10×
DIRECT
OUT
ATTENUATED
OUT

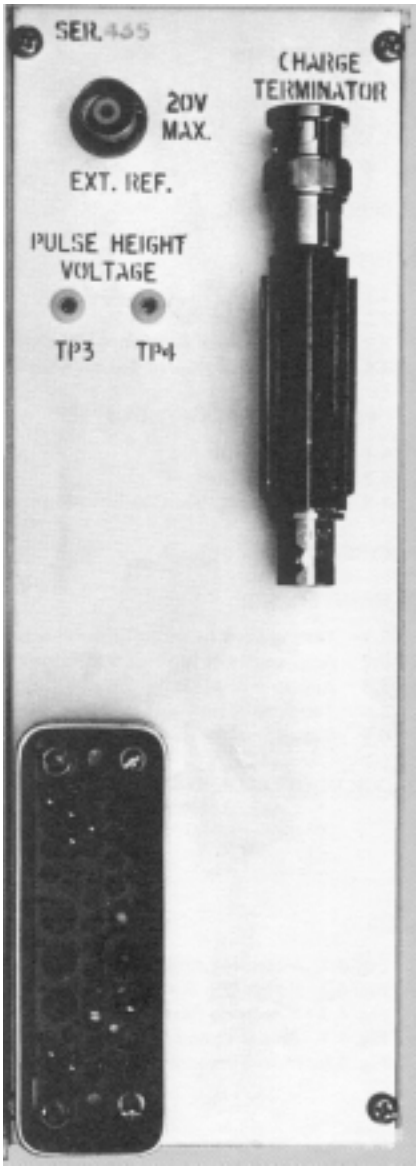
SER.435
CHARGE
TERMINATOR
20V
MAX.
EXT. REF.
PULSE HEIGHT
VOLTAGE
TP3
TP4

ORTEC MODEL 419
PRECISION PULSE GENERATOR

1. DESCRIPTION

1.1. GENERAL

The ORTEC 419 is a modular precision pulse generator that simulates the detection of a nuclear particle reaction in a semiconductor or scintillation detector. The instrument features excellent stability as a function of temperature and time, ±0.1% overall accuracy, and a front-panel NORMALIZE control so that it can be calibrated to read directly in terms of equivalent energy deposited in a detector. The 419 has a rise time control on the front panel to simulate the charge collection time in a semiconductor detector. The pulses are generated with a mercury-wetted relay whose frequency can be selected by a front-panel switch to be either ac line frequency or an internal 70-Hz oscillator. The internal oscillator runs asynchronously from the line frequency so that an experimenter can measure the effects of ac hum in his linear system. An internal-external reference voltage switch in the 419 allows the experimenter to use either the highly stable internal reference voltage or a wide-range external reference voltage that he supplies. The external reference voltage may be of an arbitrary waveshape or an arbitrarily high voltage to a limit of 20 V. When used in the external mode, the external voltage is sampled by the mercury relay and subsequently applied to the output connector. The unit has five attenuator toggle switches in a pi-attenuator arrangement in the attenuated output line. Maximum attenuation is 2000:1. The direct output precedes the attenuator switch and provides a means of oscilloscope triggering. Two terminators are provided with the unit, a 100-Ω voltage terminator and a charge terminator. The charge terminator allows the voltage output pulse of the 419 to be converted to a charge pulse for subsequent amplification by a charge-sensitive preamplifier. When not in use, the charge terminator can be stored in a holder on the rear panel.

The 419 is a double-width NIM standard module, per TID-20893 (Rev.). Its operating power is obtained from an ORTEC 4002A Power Supply through a 4001A modular Bin. The ORTEC 400 Series is designed so that it is not possible to overload the Bin Power Supply with a full complement of modules in the Bin. However, this may not be the case when the Bin contains modules other than those of ORTEC design. All signal levels and impedances are compatible with other modules in the ORTEC 400 Series.

1.2. BASIC FUNCTION

The output pulses provided by the 419 are characterized by a fast rise time and a slow exponential decay time. These pulses are generated by charging a capacitor from a reference voltage through a mercury relay and discharging the capacitor through the switching action of the mercury relay into a fixed resistive load. The use of mercury-wetted relay contacts provides a very fast rise time, typically less than 5 ns 10-90% rise time, with an absolute minimum of contact bounce or other perturbations of the waveform for the first few microseconds. The output impedance of the pulse generator on both the direct and attenuated output is 100 Ω. The direct output provides a trigger pulse that synchronizes the oscilloscopes or other timing equipment from a signal which does not vary in amplitude as the attenuators are switched in and out. The attenuated output has a series of pi-attenuators between the mercury-wetted relay contacts and the output BNC connector. This allows the signal to be attenuated by a fixed amount, depending upon the particular switch operated in the series attenuator. The primary purpose of the pulse generator is to simulate radiation detection signals; therefore a rise time control is provided to simulate the charge collection time in a semi-conductor detector. Since the pulses are generated from an electromechanical device (the mercury-wetted relay), the frequency of the pulse generator is correspondingly rather slow, approximately 70 Hz when operated on INT. OSC. and at the frequency of the ac line for the AC FREQ. position.

2. SPECIFICATIONS

PERFORMANCE

PULSE AMPLITUDE Output peak adjustable from 0 to ±l V; using the charge terminator supplied, this is 0 to 2 picocoulombs and is equivalent to 0 to 44 MeV referred to a silicon semiconductor detector; rise time selected by front-panel switch; fall time is an exponential decay time constant of 200 µs (terminated) or 400 µs (unterminated).

AMPLITUDE STABILITY

Temperature 0.005%/°C from 0 to 50°C.
Line Voltage 0.001% per 10% change in power line voltage.

RIPPLE AND NOISE 0.003% of pulse amplitude.

PULSE REPETITION RATE Either the ac power line frequency, or 70 ± 10 Hz using the internal oscillator.

INTERNAL OSCILLATOR STABILITY

Temperature Within 0.05%/°C, 0 to 50°C.
Time Within 1%/day.

CONTROLS

PULSE HEIGHT A 10-turn potentiometer with a duo-dial adjusts the output pulse amplitude within a total range; the range is a combined function of the reference and the setting of the Normalize control. Linearity ±0.1 % of full scale.

NORMALIZE A 10-turn potentiometer adjusts the total range for the Pulse Height control when using Internal Reference; full-scale range is from ±0.5 V to ±1 V; linearity ±0.1% of full scale.

RELAY A 3-position slide switch selects the ac power line frequency or the internal 70-Hz oscillator for the output repetition rate, and includes an Off position to set the pulser at standby.

REF VOLTAGE A 2-position slide switch selects either the internal reference voltage for a 100% Normalized full-scale range of 0 to ± 1 V, or the external reference voltage for an output full-scale range and polarity that are determined by the level furnished through the rear-panel BNC connector.

POLARITY A 2-position slide switch selects either polarity for the output pulses when they are based on use of the internal reference.

RISE TIME A 5-position rotary switch selects the rise time shaping for the output pulses to simulate various types of detectors; selections are Minimum (~5 ns) and 20, 50, 100, and 250 ns.

ATTENUATION FACTOR Five toggle switches that select a step attenuation for output pulses furnished through the Attenuated Output connector; the factors are 2, 2, 5, 10, and 10 and may be used in any combination to cover a 2000:1 dynamic range using 0.1% tolerance resistors.

INPUT

EXTERNAL REFERENCE A rear-panel BNC connector accepts an external reference voltage to control the full-scale Pulse Height control range and polarity when the front-panel Ref Voltage switch is set at Ext; maximum ±20V; output full-scale range is 50% of reference level with output terminated in 100 Ω.

OUTPUTS

DIRECT A front-panel BNC connector with an adjacent test point furnishes the adjusted and normalized full amplitude output pulses through an output impedance of 100 Ω.

ATTENUATED A front-panel BNC connector with an adjacent test point furnishes the same output pulses as above, with amplitudes attenuated by the factor selected with the five toggle switches.

PULSE HEIGHT CONTROL MONITOR Two test points on the rear panel permit a dc voltmeter or oscilloscope to monitor the voltage level that is applied to the pulse-forming relay.

ACCESSORIES INCLUDED

VOLTAGE TERMINATOR A standard 100-Ω resistive terminator is attached to the Direct Output BNC connector on the front panel to terminate the output correctly when only the Attenuated Output is being used.

CHARGE TERMINATOR A specially constructed terminator is mounted in a rear-panel clip and should be used to properly terminate the pulser output and feed a charge signal into the signal input of a charge-sensitive preamplifier when the output pulses are being furnished for this type of test.

ELECTRICAL AND MECHANICAL

POWER REQUIREMENTS +24 V, 45 mA; -24 V, 25 mA; + 12 V, 0 mA; - 12 V, 5 mA; 115 V ac, 10 mA.

DIMENSIONS Standard double-width NIM module (2.70 in. wide by 8.714 in. high) per TID-20893 (Rev.).

SHIPPING WEIGHT 6.5 lb (2.95 kg).

NET WEIGHT 4.5 lb (2.kg).

3. INSTALLATION

3.1. GENERAL

The 419, used in conjunction with a 4001A/4002A Bin and Power Supply, is intended for rack mounting, and therefore any vacuum tube equipment operating in the same rack must be sufficient cooled by circulating air to prevent any localized heating of the all-transistor circuitry used throughout the 419 and the 4001A/4002A. The temperature of equipment mounted in racks can easily exceed 120°F (50°C) unless precautions are taken. The 419 should not be subjected to temperatures in excess of 120°F (50°C).

3.2. CONNECTION TO POWER

The 419 contains no internal power supply and must obtain power from a nuclear standard bin and power supply, such as the ORTEC 4001A/4002A. It is recommended that the bin power supply be turned off when modules are inserted or removed. The ORTEC 4001A/4002A has test points on the power supply control panel to monitor the dc voltages. When using the 419 outside the 4001A/4002A Bin and Power Supply, be sure that the power jumper cable used properly accounts for the power supply grounding circuits provided in the recommended standards of US DOE TID-20893 (Rev.). Both high-quality and power-return ground connections are provided to ensure proper reference voltage feedback into the power supply, and these must be preserved in remote cable installations. Be careful to avoid ground loops when the module is operated outside the bin.

If the 419 is inserted in a bin which has no ac voltage, the unit will operate correctly on the INT. OSC position of the RELAY switch.

3.3. USE OF EXTERNAL REFERENCE VOLTAGE - EXTERNAL/INTERNAL REFERENCE SWITCH

The BNC connector on the rear panel provides for the use of an external reference voltage in the 419. The external reference voltage can be of any arbitrary waveshape, either dc or an arbitrary function such as a linear ramp function or any other waveform. The absolute magnitude of this voltage should not exceed 20 V, due to the power rating of the resistors in the pulse-forming network inside the 419. When using a reference voltage other than a constant dc value, ensure that the rate of change of the arbitrary waveform is slow with respect to the chopping frequency of the mercury-wetted relay in the 419. If the waveform of an input signal is much faster than the chopping frequency of the relay, considerable distortion in the output pulse amplitude will occur.

Reference to Drawing 419-0201-S1 will show that the use of an external reference voltage will cause the POLARITY and NORMALIZE controls to be ineffective when the INT-EXT switch is in the EXT position. Of course, when the switch is placed back to INT reference, the controls will again have their control function.

3.4. LINEAR OUTPUT SIGNAL CONNECTIONS AND TERMINATING IMPEDANCE CONSIDERATIONS

There are three general methods of termination that are used. The simplest of these is shunt termination at the receiving end of the cable. A

second method is series termination at the sending end. The third is a combination of series and shunt termination, where the cable impedance is matched both in series at the sending end and in shunt at the receiving end. The most effective method is the combination, but termination by this method reduces the amount of signal strength at the receiving end to 50% of that which is available in the sending instrument.

To use shunt termination at the receiving end of the cable, connect the 1-Ω output of the sending device through 93Ω cable to the input of the receiving instrument. Then use a BNC tee connector to accept both the interconnecting cable and a 100-Ω resistive terminator at the input connector of the receiving instrument. Since the input impedance of the receiving instrument is normally 1000 Ω or more, the effective instrument input impedance with the 100-Ω terminator will be of the order of 93 Ω, and this correctly matches the cable impedance.

For series termination, use the 93-Ω output of the sending instrument for the cable connection. Use 93-Ω cable to interconnect this into the input of the receiving instrument. The 1000-Ω (or more) normal input impedance at the input connector represents an essentially open circuit, and the series impedance in the sending instrument now provides the proper termination for the cable.

For the combination of series and shunt termination, use the 93-Ω output in the sending instrument for the cable connection and use 93-Ω cable. At the input for the receiving instrument, use a BNC tee to accept both the interconnecting cable and a 100-Ω resistive terminator. Note that the signal span at the receiving end of this type of receiving circuit will always be reduced to 50% of the signal span furnished by the sending instrument.

For your convenience, ORTEC stocks the proper terminators and BNC tees, or you can obtain them from a variety of commercial sources.

4. OPERATING INSTRUCTIONS[1]

4.1. PANEL CONTROLS

PULSE HEIGHT — The pulse height potentiometer controls the output pulse height from zero volts to the maximum determined by the attenuation factor toggle switches and the termination load. This 10-turn potentiometer has a calibration linearity of ±0.1%.

NORMALIZE — This 10-turn, 0.25% linearity potentiometer varies the output pulse height continuously over a 2.5 to 1 range (approximately) to allow for normalization of the PULSE HEIGHT dial setting. This control is ineffective when the reference voltage switch is in the EXT position.

RELAY — This switch allows the internal relay to be driven from either the ac line (AC FREQ. position) or the internal oscillator (INT. OSC. position). The frequency of the ac line will be 50 to 60 Hz, and the frequency of the internal oscillator will be approximately 70 Hz. The RELAY switch has a center OFF position which allows the relay to be inoperative while leaving the power on to the pulse-forming circuitry. This position minimizes thermal transients in the pulse forming network.

POLARITY — The polarity of the output signal will be either positive (+) or negative (-) as determined by the setting of the polarity switch. This control is ineffective when the reference voltage switch is in the EXT. position.

ATTENUATION FACTOR — The attenuation switches control pi-attenuators in the attenuated output line. The maximum attenuation is 2000:1. The attenuation factor switches have an accuracy controlled by 0.1% metal film resistors, and depend upon the attenuated output being terminated in 100 Ω.

RISETIME — The rise time of the attenuated output signal is controlled by this 6-position switch. The rise time marked on the front panel is elapsed time for amplitude rise from 10 to 90% of the peak value.

[1] See Section 6.1 for test performance data on pulse waveforms.

INT./EXT. (REFERENCE VOLTAGE) — The INT./EXT. reference voltage switch allows an external reference voltage to be supplied to the mercury relay through the PULSE HEIGHT control. The external reference voltage is supplied through the BNC connector on the rear panel. Any arbitrary voltage can be applied to the external BNC connector, but the maximum voltage should not exceed 20 V (refer to Section 3.3). The POLARITY and NORMALIZE controls have no effect on the output pulse when the switch is set to EXT.

4.2. CONNECTOR DATA

CN1 (DIRECT OUTPUT BNC CONNECTOR) — This is a dc-coupled, unattenuated output which looks back directly at the wiper of the relay and has an output impedance of 100 Ω. The output of this connector provides a constant output voltage for a given setting of the PULSE HEIGHT control independent of the position of the RISETIME and ATTENUATION FACTOR switches. Output voltage range is from 0 to 1 V maximum into 100 Ω. The direct output may or may not be terminated with a 100-Ω terminator. If the output is terminated with a 100-Ω terminator, the decay time of the output pulse will change from a nominal value of 400 µs to a value of 200 µs. The polarity of the Direct Output pulse will be either positive (+) or negative (-) as determined by the POLARITY switch.

CN2 (ATTENUATED OUTPUT BNC CONNECTOR) — The attenuated output is a dc-coupled output connector with an output impedance of 100 Ω. The attenuated output has in series with it the ATTENUATION FACTOR switches and the RISETIME control switch. The use of these switches therefore alters the pulse shape appearing at the attenuated output for a given setting of the PULSE HEIGHT control. The attenuated output should always be terminated with 100 Ω. The polarity of the output pulse will be either (+) or (-) as determined by the POLARITY switch.

CN3 (EXT. REF. BNC CONNECTOR) — The BNC connector on the rear panel provides for the use of an external reference voltage into the 419. The external reference voltage may be any arbitrary waveshape, either dc or a time varying function such as a linear ramp (refer to Section 3.3).

TPI (DIRECT OUTPUT TEST POINT) — Oscilloscope test point for monitoring signal on the DIRECT OUTPUT BNC Connector, CN1. This test point has a 470-Ω series resistor connecting it to CN1.

TP2 (ATTENUATED OUTPUT TEST POINT) — Oscilloscope test point for monitoring signal on ATTENUATED OUTPUT BNC Connector, CN2. This test point has a 470-Ω series resistor connecting it to CN2.

TP3 — Ground test point used in conjunction with TP4.

TP4 — The voltage between TP4 and TP3 is the dc voltage selected by the PULSE HEIGHT potentiometer on the front panel. These test points provide a convenient location for continuous monitoring of the reference voltage supplied to the relay and pulse-forming network.

POWER CONNECTOR — Nuclear standard instrument module power connector.

4.3. TYPICAL OPERATING CONSIDERATIONS

VOLTAGE AND CHARGE TERMINATORS

CHARGE TERMINATION A charge terminator which consists of a 100-Ω shunt resistor with a 2-pF series capacitor is supplied for use with charge-sensitive preamplifiers such as the ORTEC 109A. When this terminator is used, the maximum output pulse is 1 V or 2 pC (44 MeV for silicon diode detectors). When using the charge terminator to drive charge-sensitive preamplifiers, a coaxial cable having an impedance of approximately 100 Ω (RG-62/U) should be used between the pulse generator and the charge terminator. The terminator should be located at the input connector of the preamplifier. The charge terminator may be used with or without a detector connected to the input of a preamplifier. If a detector is connected to the preamplifier, detector bias must be applied to reduce the effective detector capacity shunting the charge-sensitive preamplifier input. Also, with the charge terminator used simultaneously with a semiconductor detector, the charge terminator effectively shunts the detector with approximately 2.5 pF of shunt capacity, which will correspondingly degrade the signal-to-noise performance of the preamplifier.

VOLTAGE TERMINATION For voltage drive to an instrument under test, use coaxial cable having an impedance of approximately 100 Ω (RG-62/U) between the pulse generator and the instrument under test. Place a 100-Ω termination at the instrument end of the cable in shunt with the input of the instrument.

CALIBRATING TEST PULSER AND AMPLIFIER FOR ENERGY MEASUREMENTS

The 419 pulser may easily be calibrated so that the maximum PULSE HEIGHT dial reading (1000 divisions) is equivalent to a specific MeV loss in a radiation detector. The procedure is as follows:

1. Connect the detector to be used to the spectrometer system; i.e., preamplifier, main amplifier, and biased amplifier.

2. Allow particles from a source of known energy (alpha particles, for example) to fall on the detector.

3. Adjust the amplifier gains and the bias level of the biased amplifier to give a suitable output pulse.

4. Set the pulser PULSE HEIGHT potentiometer at the energy of the alpha particles striking the detector (e.g., for a 5.1-MeV alpha particle, set the dial at 510 divisions).

5. Turn on the pulser. Use the NORMALIZE potentiometer, the RISETIME switch, and the ATTENUATION FACTOR switches to set the output due to the pulser to the same pulse height and shape as the pulse obtained in 3 above. Particular attention to the RISETIME should be given when the collection time of the detector is longer than 10–20 ns.

AMPLIFIER NOISE AND RESOLUTION MEASUREMENTS

As shown in Fig. 4.1, the preamplifier, amplifier, pulse generator, oscilloscope, and a wide-band rms voltmeter, such as the Hewlett-Packard 400D, are required for this measurement. Connect a suitable capacitor to the input to simulate the detector capacitance desired. To obtain the resolution spread due to noise:

1. Measure the rms noise voltage (E_{rms}) at the linear amplifier output.

2. Turn on the 419 pulse generator and adjust the linear amplifier output to any convenient readable voltage, E_o, as determined by the oscilloscope.

3. The full width at half maximum (FWHM) resolution spread due to the amplifier noise is then $N(FWHM) = 2.66\ E_{rms}\ E_{dial}/E_o$, where E_{dial} is the pulser dial reading in MeV, and the factor 2.66 is the correction factor for rms to FWHM (2.35) and noise to rms meter correction (1.13) for average indicating voltmeters such as the Hewlett-Packard 400D. The resolution spread will depend upon the total input capacity, since the capacitance degrades the signal-to-noise ratio much faster than the noise. A typical resolution spread versus external input capacitance is shown in Fig. 4.2.

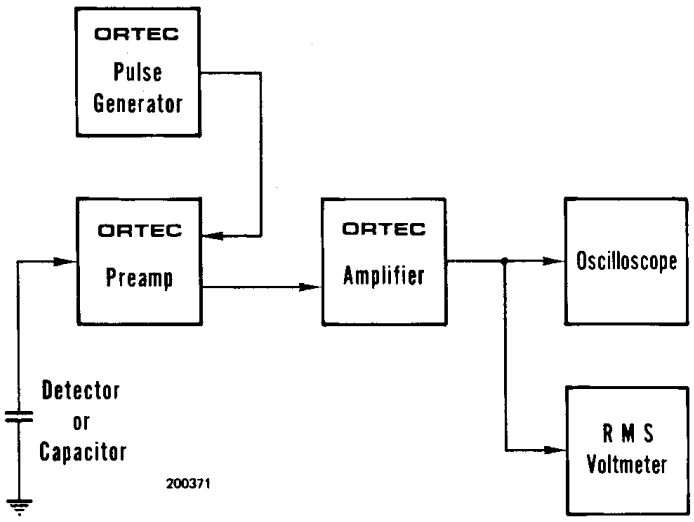

Fig. 4.1. Measuring Amplifier and Detector Noise Resolution.

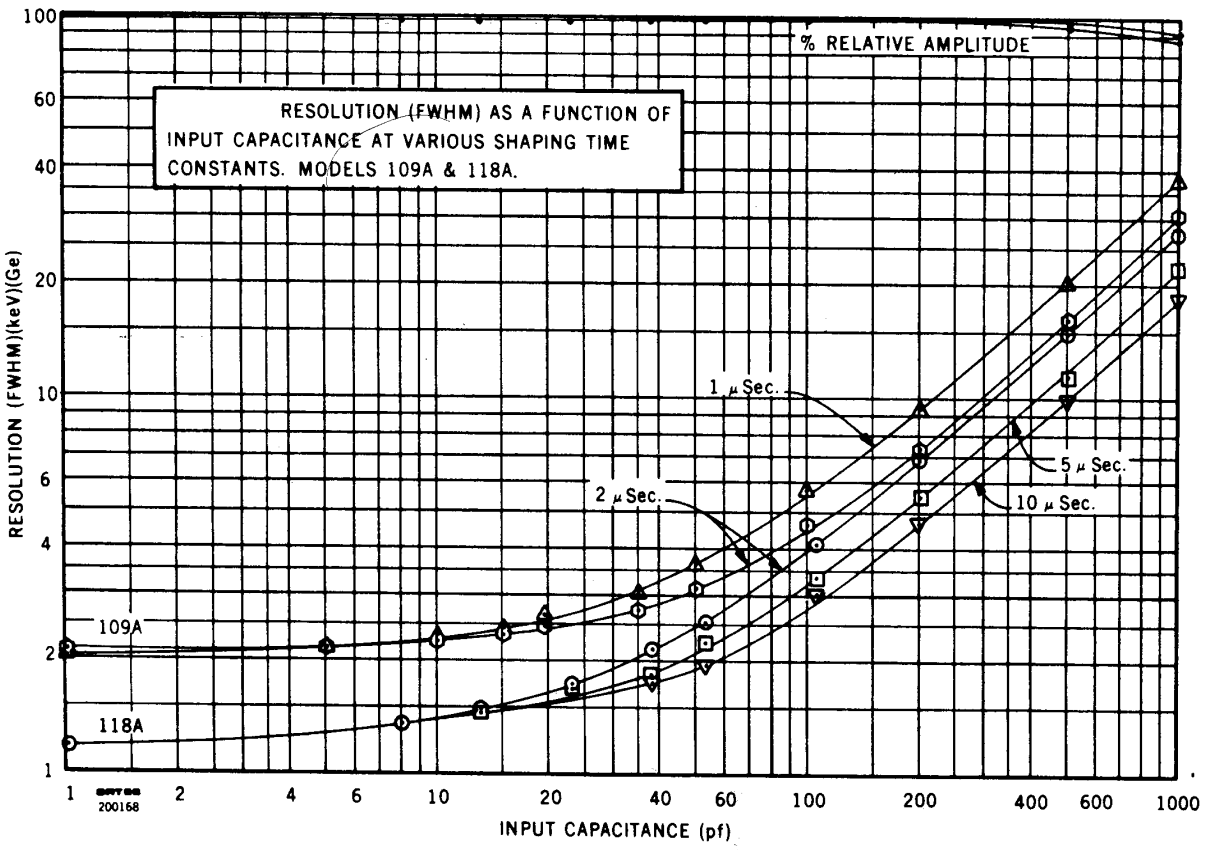

Fig. 4.2. Resolution Spread vs. External Input Capacity.

AMPLIFIER NOISE AND RESOLUTION MEASUREMENTS USING A PULSE HEIGHT ANALYZER

Probably the most convenient method of making resolution measurements is with a pulse height analyzer as shown in Fig. 4.3. The amplifier noise resolution spread can be measured correctly with a pulse height analyzer and the 419 as follows:

1. Select the energy of interest with the 419, and set the linear amplifier and biased amplifier gain and bias level controls so that the energy is in a convenient channel of the analyzer.

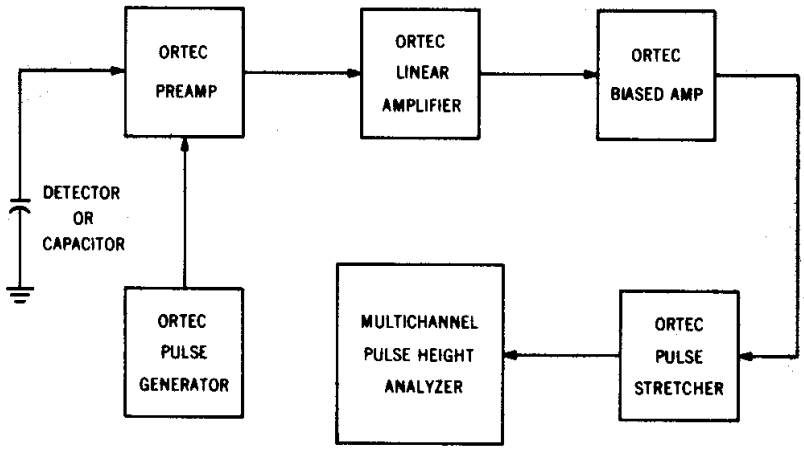

Fig. 4.3. Measuring Resolution with a Pulse Height Analyzer.

2. Calibrate the analyzer in keV per channel, using the pulser. (Full scale on the pulser dial is 10 MeV when calibrated as described in "Calibrating the Test Pulser and Amplifier for Energy Measurements.")

3. The amplifier noise resolution spread can then be obtained by measuring the FWHM of the pulser spectrum. The detector noise resolution spread for a given detector bias can be determined in the same manner by connecting a detector to the preamplifier input. The amplifier noise resolution spread, of course, must be subtracted. The detector noise will vary with detector size, bias conditions, and possibly with ambient conditions, as indicated in Fig. 4.4

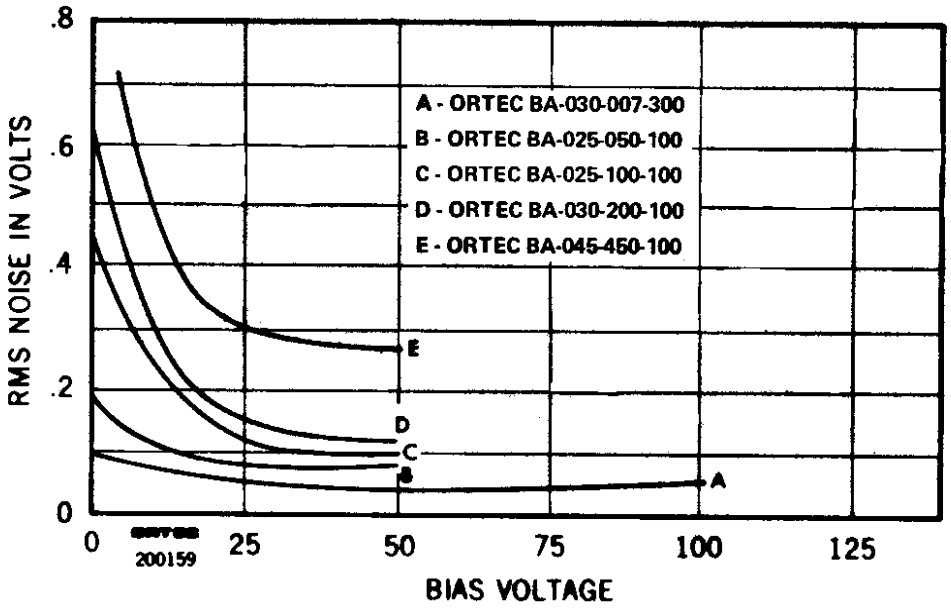

Fig. 4.4. Amplifier and Detector Noise vs. Bias Voltage.

AMPLIFIER LINEARITY MEASUREMENTS

The measurement of amplifier linearity can be quickly and simply done by utilizing the method outlined in Fig. 4.5. The method consists of bucking out two voltage signals from low-impedance sources and measuring the amplitude differential at a null point.

The following conditions of Fig. 4.5 should be considered when making linearity measurements. The output impedance of the DIRECT OUTPUT must be 100 Ω. The amplifier must be set in the inverting mode of operation; i.e., for the negative input shown, the amplifier must produce a positive output pulse. The impedance seen from point A to ac, or signal, ground via point C should be equal to the impedance seen from point A to ac, or signal, ground via point B. The diodes D should be germanium units with high G_m. The diodes can be replaced with high-frequency germanium transistors with the base connected to the collector so that the emitter-base functions as the diode.

Transistors suitable for this test include 2N779, 2N964, 2N976, 2N2048. The diodes serve as bipolar voltage clamps to limit the voltage swing at point A to the forward voltage drop across the diodes. The diode-resistor network should be constructed so as to minimize the stray capacitance around this network. The network should be physically located on the oscilloscope input connector for the same reason.

Initially the output of the pulse generator and amplifier should be set for 10 V. This should be measured with care, and consideration given for the output impedance of both the pulse generator and

amplifier. By observing the waveshape at point A (Fig. 4.5), the fine gain of the amplifier and the attenuation controls should be adjusted until a null is obtained between time t_1, and t_2. At null, the sensitivity of the oscilloscope should be set to 10 mV/cm for best resolution of the null measurement.

The actual measurement of linearity is accomplished by dialing the PULSE HEIGHT dial to 0, resulting in the amplifier output being reduced to zero. Since the pulse generator supplies signals in parallel both to the bridge for null and to the amplifier, varying the pulse generator output will have no effect on the null if perfect amplifier linearity is assumed.

As an example of this method, assume that the amplifier under test has essentially zero output impedance. Set R1 equal to 100 Ω and R2 equal to 200 Ω. Let diodes D1 an D2 be 2N2048 connected as diodes. One-half of the change in the output voltage of the amplifier to be observed at point A results from the attenuation factor of R1 and the output impedance of the DIRECT OUTPUT of the pulse generator, the rest from R2. To specify nonlinearity as a percentage of full output voltage, the calibration of 10 mV/cm will be equal to 10 mV/5 V or 0.2%/cm. Therefore it is seen that 0.1% is quite easily resolved.

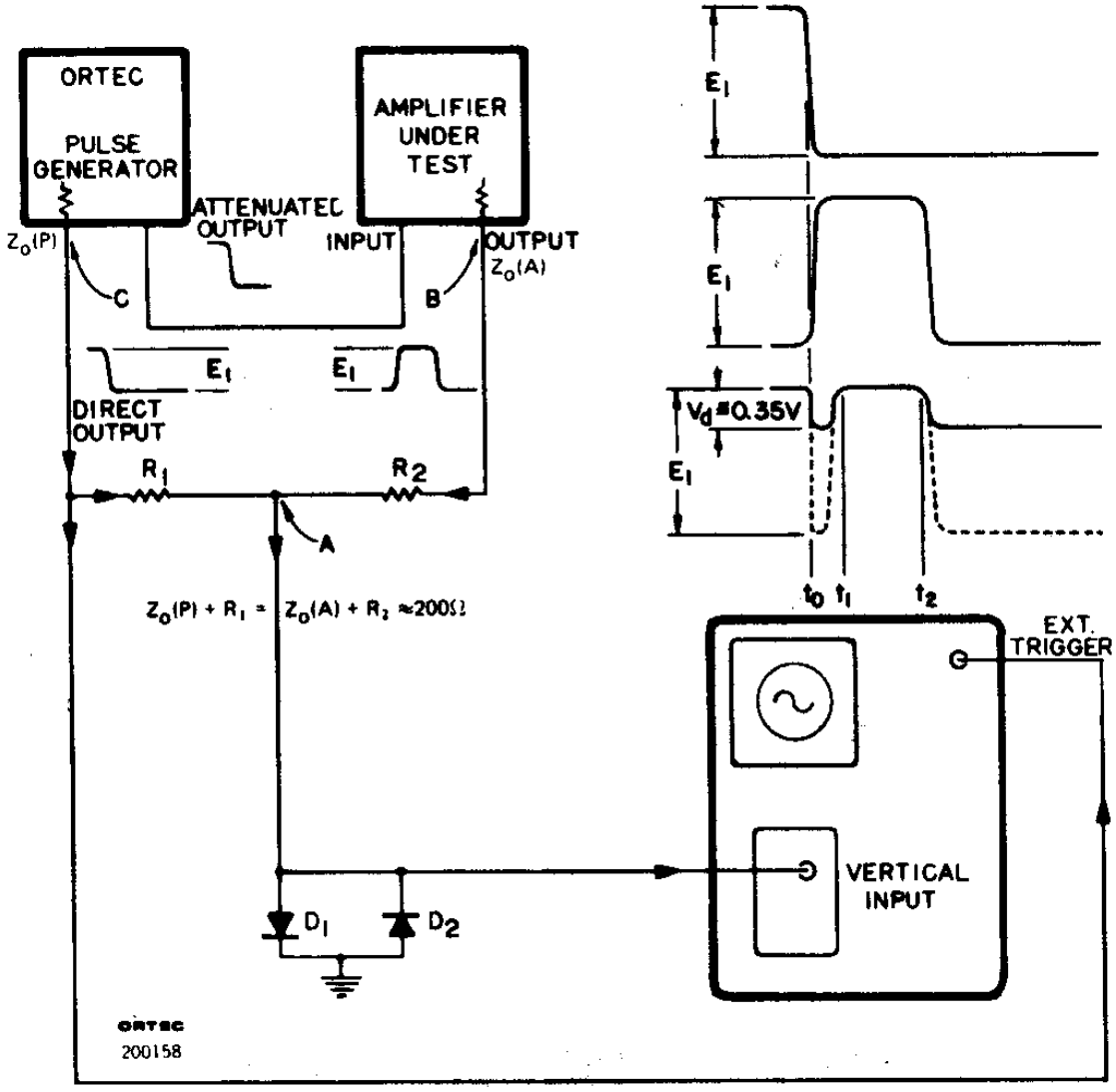

Fig. 4.5. Measuring Linearity by the Null-Balance Method.

In addition to linearity measurements, it is obvious that this method can be quite useful in measurements of temperature stability.

PULSE HEIGHT ANALYZER CALIBRATION

With the pulser calibrated to read directly in terms of energy as described previously, the calibration of a complete spectrometry system from preamplifier to multichannel analyzer, i.e., analog to digital converter (ADC), can readily be accomplished by simply feeding into the preamplifier a calibrated energy signal and observing the corresponding channel into which it is assigned by the ADC. An important consideration in this test involves ensuring that the linear system "goes through zero" and that the output of the pulse generator is properly terminated. The attenuator switches in the 419 have an accuracy controlled by 0.1% metal film resistors and can be used to digitally check the linearity of the spectrometer. In addition to the attenuator accuracy, the PULSE HEIGHT control has independent integral nonlinearity of ±0.1%. This control therefore allows an integral linearity curve of the ADC to be taken over the continuous range of the ADC, i.e., from zero to the maximum address of the ADC. The linearity of the ADC can therefore be determined by having previously taken the linearity curve of the amplifier and preamplifier as outlined in "Amplifier Linearity Measurements."

5. MAINTENANCE

5.1. TESTING PERFORMANCE OF THE PULSE GENERATOR

The following paragraphs are intended as an aid in the installation and checkout of the 419. These instructions present information on front-panel controls, waveforms at test points, and output connectors.

Test Equipment

The following, or equivalent, test equipment is needed:

ORTEC 419 Pulse Generator
Tektronix Model 580 Series Oscilloscope
100-Ω BNC Terminators
Vacuum Tube Voltmeter
Schematic and Block Diagram for 419 Precision Pulse Generator

Preliminary Procedures

1. Visually check the module for possible damage due to shipment.

2. Connect ac power to nuclear standard bin, ORTEC 4001A/4002A.

3. Plug module into bin and check for proper mechanical alignment.

4. Switch ac power on and check the dc power supply voltages at the test points on the 4002A Power Supply control panel.

Precision Pulse Generator

Set the front-panel controls on the 419 as follows:

1. Relay switch to Internal Oscillator.

2. Polarity switch to (+).

3. Reference switch to INT.

4. The NORMALIZE and PULSE HEIGHT controls to 1000.

5. RISETIME to MIN.

6. All ATTENUATOR switches to down position.

Terminate the direct output in 100 Ω. Keep the direct output terminated throughout the test in 100 Ω.

Apply power to the nuclear standard bin and listen for the mercury relay running, which will be characterized by a low-frequency hum of about 75 Hz.

Set the relay switch to OFF. Measure the dc voltage from the wiper of the REFERENCE switch on the rear panel to ground. It should be between 1.75 and 2.25 V.

Dial the NORMALIZE control to 000, and again measure the dc voltage from the wiper of the REFERENCE switch to ground. It should be between 0.7 and 0.85 V. Return the NORMALIZE control to 1000.

Set the relay switch to AC FREQ.

Measure the pulse at the direct output test point. The pulse amplitude should be between the limits of 0.9 and 1.2 V. The pulse rise time (10-90%) should be less than 10 ns; the pulse fall time to one-half of its maximum amplitude should be between 230 and 290 ps. Do not remove the 100-Ω terminator from the direct output.

Terminate attenuated output with 100 Ω. Measure the pulse at the attenuated output test point. The pulse amplitude should be between the limits of 0.9 and 1.2 V. The pulse rise time (10–90%) should be less than 10 ns. The pulse fall time to one-half of its maximum amplitude should be between 110 and 150 µs.

Adjust the PULSE HEIGHT dial for a pulse at the attenuated output test point of 800 mV. As ATTENUATOR switches are switched in, the output pulse should be between the following limits:

	Output Pulse (mV)		
	Original	Lower	Upper
2X	800	360	440
2X	800	360	440
5X	800	144	176
10X	800	72	88
10X	800	72	88

With an 800-mV output pulse at the attenuated test point, measure the 10-90% rise time for all positions of the RISETIME switch. The rise time should be within the following limits:

	Rise Time (ns)	
Switch Setting	Lower	Upper
Minimum	3	10
20	17	23
50	40	60
100	90	110
250	225	295

Set the relay switch to INT OSC. Measure the frequency at the direct output. The frequency limits are 61 to 79 Hz. If a scaler is not available, measure the time between the leading edges of two successive pulses at Q2 emitter. The period should be between 12.6 and 16.4 ms.

Set the POLARITY switch to (-). There should be no change in amplitude from the (+) position. Observe the output with a sweep of 5 ms/cm and look for "skipping" or other erratic behavior of the relay on INT OSC operation.

5.2. ADJUSTMENT OF INTERNAL OSCILLATOR FREQUENCY

The internal oscillator normally oscillates at a frequency of approximately 70 Hz. This frequency may be changed by changing the value of capacitor C2, which is nominally a 6.8-µF capacitor. To decrease the frequency of oscillation, it is necessary to increase the value of the capacitor. Increasing the frequency of oscillation above approximately 80 Hz is not recommended, since the mercury-wetted relay will not operate reliably above this frequency. In the event it is desired to change the frequency of oscillation a small amount, paralleling resistors R8 or R9 with an additional resistor will be found to be satisfactory. The etched circuit board is provided with holes for the addition of such resistors. The frequency should not be changed by more than 10% with this simple expedient. It is frequently desirable to decrease the frequency to a very low level, e.g., 20 Hz, so that the oscillator can run at a very low rate during the collection of experimental data and not overflow in a multichannel analyzer. This should be accomplished by increasing the value of C2.

5.3. ADJUSTMENT OF DECAY TIME OF OUTPUT PULSE

As the 419 is normally supplied, the decay time of the output pulse is essentially fixed. The output pulse will decay with the time constant of 400 µs if the direct output only is terminated in 100 Ω and will decay with a time constant of approximately 200 µs if both the direct output and attenuated output are terminated. In the event that a time constant shorter than 200 µs is desired, a fixed resistor should be paralleled from the normally open contact of the mercury-wetted relay to ground. The value of this shunting resistor will depend upon the exponential time constant. The addition of this

resistor should physically be in close proximity to the actual relay; that is, the resistor should be added directly onto the etched circuit board. Decay time constants as short as 10 µs can be accomplished quite easily.

5.4. TABULATED TEST POINT VOLTAGES

The following voltages are intended to indicate the typical dc voltages measured on the etched circuit board. In some cases the circuit will perform satisfactorily even though, due to component variations, there may be some voltages that measure outside the given limits. Therefore the voltages given should not be taken as absolute values, but rather are intended to serve as an aid in troubleshooting. All voltages are measured from ground with a dvm having an input impedance of 10 MΩ or greater. Set polarity switch to (+).

Location	Typical dc Voltages
Qlb	12.0
Dlk	9.1

5.5. SUGGESTIONS FOR TROUBLESHOOTING

If the 419 is suspected of malfunctioning, it is essential to verify such malfunctioning in terms of simple pulse generator impulses at the output. In consideration of this, the 419 must be disconnected from its position in any system, and routine diagnostic analysis performed on the pulse generator with a vacuum tube voltmeter and oscilloscope. It is imperative that testing not be performed with any amplifier system until the pulse generator performs satisfactorily by itself. The testing instructions of Section 5.1 of this manual is intended to provide assistance in locating the region of trouble and repairing the malfunction. The guide plate and shield cover can be completely removed from the module to enable oscilloscope and voltmeter observations with a minimum chance of accidentally short circuiting portions of the etched board.

The 419 may be returned to ORTEC for repair service at nominal cost. Our standardized procedure requires that each repaired instrument receive the same extensive quality control tests that a new instrument receives.

Bin/Module Connector Pin Assignments For Standard Nuclear Instrument Modules per DOE/ER-0457T.

Pin	Function	Pin	Function
1	+3 V	23	Reserved
2	−3 V	24	Reserved
3	Spare bus	25	Reserved
4	Reserved bus	26	Spare
5	Coaxial	27	Spare
6	Coaxial	*28	+24 V
7	Coaxial	*29	−24 V
8	200 V dc	30	Spare bus
9	Spare	31	Spare
*10	+6 V	32	Spare
*11	−6 V	*33	117 V ac (hot)
12	Reserved bus	*34	Power return ground
13	Spare	35	Reset (Scaler)
14	Spare	36	Gate
15	Reserved	37	Reset (Auxiliary)
*16	+12 V	38	Coaxial
*17	−12 V	39	Coaxial
18	Spare bus	40	Coaxial
19	Reserved bus	*41	117 V ac (neutral)
20	Spare	*42	High-quality ground
21	Spare	G	Ground guide pin
22	Reserved		

Pins marked (*) are installed and wired in ORTEC's 4001A and 4001C Modular System Bins.

OPERATING AND SERVICE MANUAL

FOR

EG&G ORTEC

PRECISION PULSE GENERATOR

MODEL 419

RECORD OF REVISIONS

TITLE OF DOCUMENT

OPERATING AND SERVICE MANUAL
FOR
EG&G ORTEC
PRECISION PULSE GENERATOR
MODEL 419

REVISION NUMBER	DATE	DESCRIPTION OF REVISION	REVISED BY
0	7-11-89	ORIGINAL	Vikki E. Adams

ORTEC
INCORPORATED
AN EG&G COMPANY

Model 419
Precision Pulse Generator
Operating and Service Manual

STANDARD WARRANTY FOR ORTEC INSTRUMENTS

ORTEC warrants that the items will be delivered free from defects in material or workmanship. ORTEC makes no other warranties, express or implied, and specifically **NO WARRANTY OF MERCHANTABILITY OR FITNESS FOR A PARTICULAR PURPOSE.**

ORTEC's exclusive liability is limited to repairing or replacing at ORTEC's option, items found by ORTEC to be defective in workmanship or materials within one year from the date of delivery. ORTEC's liability on any claim of any kind, including negligence, loss or damages arising out of, connected with, or from the performance or breach thereof, or from the manufacture, sale, delivery, resale, repair, or use of any item or services covered by this agreement or purchase order, shall in no case exceed the price allocable to the item or service furnished or any part thereof that gives rise to the claim. In the event ORTEC fails to manufacture or deliver items called for in this agreement or purchase order, ORTEC's exclusive liability and buyer's exclusive remedy shall be release of the buyer from the obligation to pay the purchase price. In no event shall ORTEC be liable for special or consequential damages.

QUALITY CONTROL

Before being approved for shipment, each ORTEC instrument must pass a stringent set of quality control tests designed to expose any flaws in materials or workmanship. Permanent records of these tests are maintained for use in warranty repair and as a source of statistical information for design improvements.

REPAIR SERVICE

If it becomes necessary to return this instrument for repair, it is essential that Customer Services be contacted in advance of its return so that a Return Authorization Number can be assigned to the unit. Also, ORTEC must be informed, either in writing or by telephone [(615) 482-4411], of the nature of the fault of the instrument being returned and of the model, serial, and revision ("Rev" on rear panel) numbers. Failure to do so may cause unnecessary delays in getting the unit repaired. The ORTEC standard procedure requires that instruments returned for repair pass the same quality control tests that are used for new-production instruments. Instruments that are returned should be packed so that they will withstand normal transit handling and must be shipped **PREPAID** via Air Parcel Post or United Parcel Service to the nearest ORTEC repair center. The address label and the package should include the Return Authorization Number assigned. Instruments being returned that are damaged in transit due to inadequate packing will be repaired at the sender's expense, and it will be the sender's responsibility to make claim with the shipper. Instruments not in warranty will be repaired at the standard charge unless they have been grossly misused or mishandled, in which case the user will be notified prior to the repair being done. A quotation will be sent with the notification.

DAMAGE IN TRANSIT

Shipments should be examined immediately upon receipt for evidence of external or concealed damage. The carrier making delivery should be notified immediately of any such damage, since the carrier is normally liable for damage in shipment. Packing materials, waybills, and other such documentation should be preserved in order to establish claims. After such notification to the carrier, please notify ORTEC of the circumstances so that assistance can be provided in making damage claims and in providing replacement equipment if necessary.

TABLE OF CONTENTS

	Page
WARRANTY	
PHOTOGRAPH	
1. DESCRIPTION	1
1.1 General	1
1.2 Basic Function	1
2. SPECIFICATIONS	2
3. INSTALLATION	3
3.1 General	3
3.2 Connection to Power	3
3.3 Use of External Reference Voltage – External/Internal Reference Switch	3
3.4 Linear Output Signal Connections and Terminating Impedance Considerations	3
4. OPERATING INSTRUCTIONS	4
4.1 Panel Controls	4
4.2 Connector Data	4
4.3 Typical Operating Considerations	5
5. CIRCUIT DESCRIPTION	8
6. MAINTENANCE	8
6.1 Testing Performance of the Pulse Generator	8
6.2 Adjustment of Internal Oscillator Frequency	9
6.3 Adjustment of Decay Time of Output Pulse	9
6.4 Tabulated Test Point Voltages	9
6.5 Suggestions for Troubleshooting	9
BLOCK DIAGRAM AND SCHEMATIC 419-0201-B1 419-0201-S1	

LIST OF FIGURES

Fig. 4.1. Measuring Amplifier and Detector Noise Resolution.	5
Fig. 4.2. Resolution Spread vs External Input Capacity.	6
Fig. 4.3. Measuring Resolution with a Pulse Height Analyzer.	6
Fig. 4.4. Amplifier and Detector Noise vs Bias Voltage.	6
Fig. 4.5. Measuring Linearity by the Null-Balance Method.	7

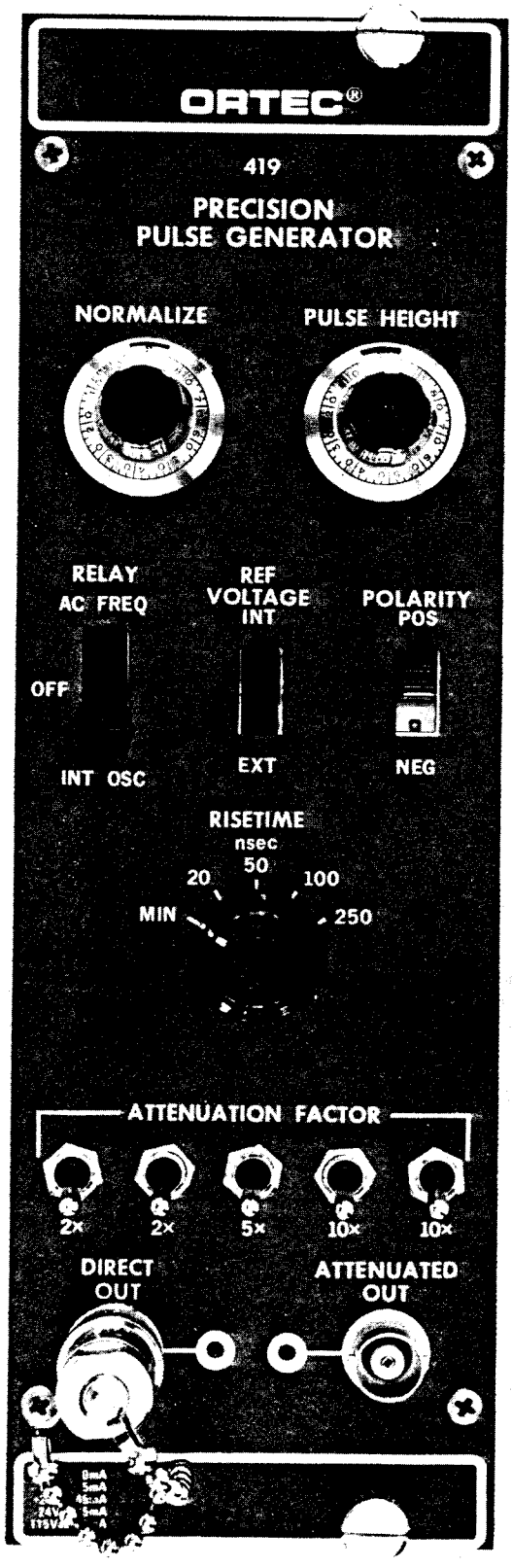
ORTEC®
419
PRECISION
PULSE GENERATOR
NORMALIZE
PULSE HEIGHT
RELAY
AC FREQ
REF
VOLTAGE
INT
POLARITY
POS
OFF
INT OSC
EXT
NEG
RISETIME
nsec
20
50
100
MIN
250
ATTENUATION FACTOR
2×
2×
5×
10×
10×
DIRECT
OUT
ATTENUATED
OUT

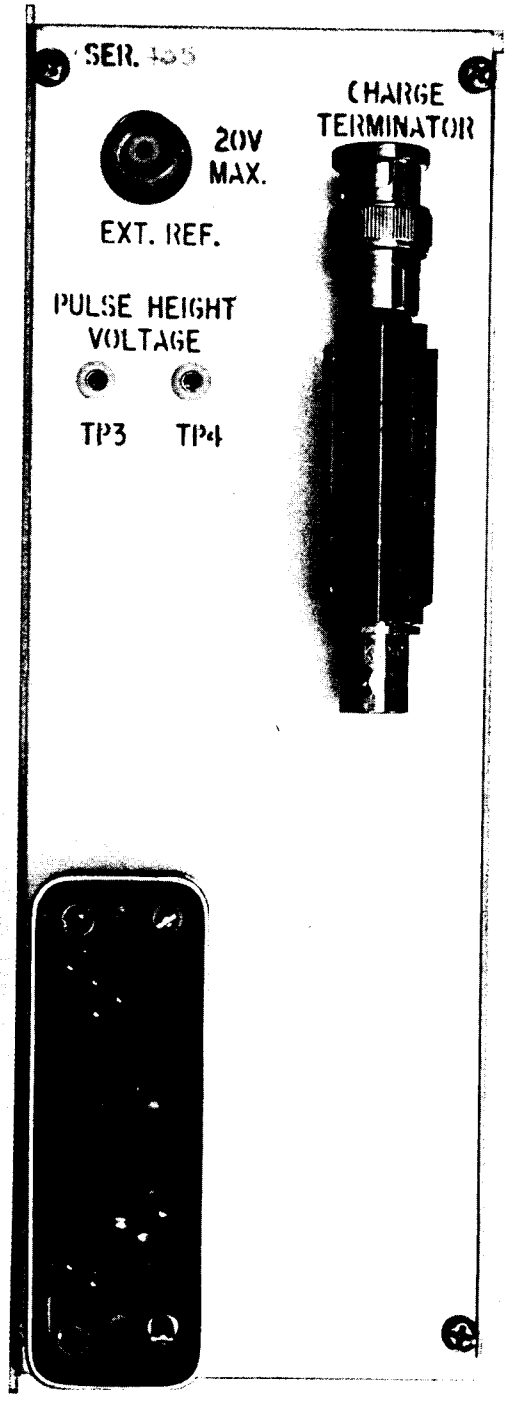
SER.
20V
MAX.
EXT. REF.
PULSE HEIGHT
VOLTAGE
TP3
TP4
CHARGE
TERMINATOR

ORTEC 419 PRECISION PULSE GENERATOR

1. DESCRIPTION

1.1 GENERAL

The ORTEC 419 is a modular precision pulse generator that simulates the detection of a nuclear particle reaction in a semiconductor or scintillation detector. The instrument features excellent stability as a function of temperature and time, ±0.1% overall accuracy, and a front-panel NORMALIZE control so that it can be calibrated to read directly in terms of equivalent energy deposited in a detector. The 419 has a rise time control on the front panel to simulate the charge collection time in a semiconductor detector. The pulses are generated with a mercury-wetted relay whose frequency can be selected by a front-panel switch to be either ac line frequency or an internal 70-Hz oscillator. The internal oscillator runs asynchronously from the line frequency so that an experimenter can measure the effects of ac hum in his linear system. An internal-external reference voltage switch in the 419 allows the experimenter to use either the highly stable internal reference voltage or a wide-range external reference voltage that he supplies. The external reference voltage may be of an arbitrary waveshape or an arbitrarily high voltage to a limit of 20 V. When used in the external mode, the external voltage is sampled by the mercury relay and subsequently applied to the output connector. The unit has five attenuator toggle switches in a pi-attenuator arrangement in the attenuated output line. Maximum attenuation is 2000:1. The direct output precedes the attenuator switch and provides a means of oscilloscope triggering. Two terminators are provided with the unit, a 100Ω voltage terminator and a charge terminator. The charge terminator allows the voltage output pulse of the 419 to be converted to a charge pulse for subsequent amplification by a charge-sensitive preamplifier. When not in use, the charge terminator can be stored in a holder on the rear panel.

The 419 is a double-width NIM standard module, per TID-20893 (Rev.). Its operating power is obtained from an ORTEC 402A Power Supply through a 401A modular Bin. The ORTEC 400 Series is designed so that it is not possible to overload the Bin Power Supply with a full complement of modules in the Bin. However, this may not be the case when the Bin contains modules other than those of ORTEC design. All signal levels and impedances are compatible with other modules in the ORTEC 400 Series.

1.2 BASIC FUNCTION

The output pulses provided by the 419 are characterized by a fast rise time and a slow exponential decay time. These pulses are generated by charging a capacitor from a reference voltage through a mercury relay and discharging the capacitor through the switching action of the mercury relay into a fixed resistive load. The use of mercury-wetted relay contacts provides a very fast rise time, typically less than 5 ns 10-90% rise time, with an absolute minimum of contact bounce or other perturbations of the waveform for the first few microseconds. The output impedance of the pulse generator on both the direct and attenuated output is 100Ω. The direct output provides a trigger pulse that synchronizes the oscilloscopes or other timing equipment from a signal which does not vary in amplitude as the attenuators are switched in and out. The attenuated output has a series of pi-attenuators between the mercury-wetted relay contacts and the output BNC connector. This allows the signal to be attenuated by a fixed amount, depending upon the particular switch operated in the series attenuator. The primary purpose of the pulse generator is to simulate radiation detection signals; therefore a rise time control is provided to simulate the charge collection time in a semiconductor detector. Since the pulses are generated from an electromechanical device (the mercury-wetted relay), the frequency of the pulse generator is correspondingly rather slow, approximately 70 Hz when operated on INT. OSC. and at the frequency of the ac line for the AC FREQ. position.

2. SPECIFICATIONS

PERFORMANCE

PULSE AMPLITUDE Output peak adjustable from 0 to ±1 V; using the charge terminator supplied, this is 0 to 2 picocoulombs and is equivalent to 0 to 44 MeV referred to a silicon semiconductor detector; rise time selected by front-panel switch; fall time is an exponential decay time constant of 200 μs (terminated) or 400 μs (unterminated).

AMPLITUDE STABILITY

Temperature 0.005%/°C from 0 to 50°C.

Line Voltage 0.001% per 10% change in power line voltage.

RIPPLE AND NOISE 0.003% of pulse amplitude.

PULSE REPETITION RATE Either the ac power line frequency, or 70 ± 10 Hz using the internal oscillator.

INTERNAL OSCILLATOR STABILITY

Temperature Within 0.05%/°C, 0 to 50°C.

Time Within 1%/day.

CONTROLS

PULSE HEIGHT A 10-turn potentiometer with a duo-dial adjusts the output pulse amplitude within a total range; the range is a combined function of the reference and the setting of the Normalize control. Linearity ±0.1% of full scale.

NORMALIZE A 10-turn potentiometer adjusts the total range for the Pulse Height control when using Internal Reference; full-scale range is from ±0.5 V to ±1 V; linearity ±0.1% of full scale.

RELAY A 3-position slide switch selects the ac power line frequency or the internal 70-Hz oscillator for the output repetition rate, and includes an Off position to set the pulser at standby.

REF VOLTAGE A 2-position slide switch selects either the internal reference voltage for a 100% Normalized full-scale range of 0 to ±1 V, or the external reference voltage for an output full-scale range and polarity that are determined by the level furnished through the rear-panel BNC connector.

POLARITY A 2-position slide switch selects either polarity for the output pulses when they are based on use of the internal reference.

RISE TIME A 5-position rotary switch selects the rise time shaping for the output pulses to simulate various types of detectors; selections are Minimum (~5 ns) and 20, 50, 100, and 250 ns.

ATTENUATION FACTOR Five toggle switches that select a step attenuation for output pulses furnished through the Attenuated Output connector; the factors are 2, 2, 5, 10, and 10 and may be used in any combination to cover a 2000:1 dynamic range using 0.1% tolerance resistors.

INPUT

EXTERNAL REFERENCE A rear-panel BNC connector accepts an external reference voltage to control the full-scale Pulse Height control range and polarity when the front-panel Ref Voltage switch is set at Ext; maximum ±20V; output full-scale range is 50% of reference level with output terminated in 100Ω.

OUTPUTS

DIRECT A front-panel BNC connector with an adjacent test point furnishes the adjusted and normalized full amplitude output pulses through an output impedance of 100Ω.

ATTENUATED A front-panel BNC connector with an adjacent test point furnishes the same output pusles as above, with amplitudes attenuated by the factor selected with the five toggle switches.

PULSE HEIGHT CONTROL MONITOR Two test points on the rear panel permit a dc voltmeter or oscillscope to monitor the voltage level that is applied to the pulse-forming relay.

ACCESSORIES INCLUDED

VOLTAGE TERMINATOR A standard 100Ω resistive terminator is attached to the Direct Output BNC connector on the front panel to terminate the output correctly when only the Attenuated Output is being used.

CHARGE TERMINATOR A specially constructed terminator is mounted in a rear-panel clip and should be used to properly terminate the pulser output and feed a charge signal into the signal input of a charge-sensitive preamplifier when the output pulses are being furnished for this type of test.

ELECTRICAL AND MECHANICAL

POWER REQUIREMENTS +24 V, 45 mA; −24 V, 25 mA; +12 V, 0 mA; −12 V, 5 mA; 115 V ac, 10 mA.

DIMENSIONS Standard double-width NIM module (2.70 in. wide by 8.714 in. high) per TID-20893 (Rev.).

SHIPPING WEIGHT 6.5 lb (2.95 kg).

NET WEIGHT 4.5 lb (2 kg).

3. INSTALLATION

3.1 GENERAL

The 419, used in conjunction with a 401A/402A Bin and Power Supply, is intended for rack mounting, and therefore any vacuum tube equipment operating in the same rack must be sufficiently cooled by circulating air to prevent any localized heating of the all-transistor circuitry used throughout the 419 and the 401A/402A. The temperature of equipment mounted in racks can easily exceed 120°F (50°C) unless precautions are taken. The 419 should not be subjected to temperatures in excess of 120°F (50°C).

3.2 CONNECTION TO POWER

The 419 contains no internal power supply and must obtain power from a nuclear standard bin and power supply, such as the ORTEC 401A/402A. It is recommended that the bin power supply be turned off when modules are inserted or removed. The ORTEC 401A/402A has test points on the power supply control panel to monitor the dc voltages. When using the 419 outside the 401A/402A Bin and Power Supply, be sure that the power jumper cable used properly accounts for the power supply grounding circuits provided in the recommended standards of USAEC TID-20893 (Rev.). Both high-quality and power-return ground connections are provided to ensure proper reference voltage feedback into the power supply, and these must be preserved in remote cable installations. Be careful to avoid ground loops when the module is operated outside the bin.

If the 419 is inserted in a bin which has no ac voltage, the unit will operate correctly on the INT. OSC position of the RELAY switch.

3.3 USE OF EXTERNAL REFERENCE VOLTAGE – EXTERNAL/INTERNAL REFERENCE SWITCH

The BNC connector on the rear panel provides for the use of an external reference voltage in the 419. The external reference voltage can be of any arbitrary waveshape, either dc or an arbitrary function such as a linear ramp function or any other waveform. The absolute magnitude of this voltage should not exceed 20 V, due to the power rating of the resistors in the pulse-forming network inside the 419. When using a reference voltage other than a constant dc value, ensure that the rate of change of the arbitrary waveform is slow with respect to the chopping frequency of the mercury-wetted relay in the 419. If the waveform of an input signal is much faster than the chopping frequency of the relay, considerable distortion in the output pulse amplitude will occur.

Reference to Drawing 419-0201-S1 will show that the use of an external reference voltage will cause the POLARITY and NORMALIZE controls to be ineffective when the INT-EXT switch is in the EXT position. Of course, when the switch is placed back to INT reference, the controls will again have their control function.

3.4 LINEAR OUTPUT SIGNAL CONNECTIONS AND TERMINATING IMPEDANCE CONSIDERATIONS

There are three general methods of termination that are used. The simplest of these is shunt termination at the receiving end of the cable. A second method is series termination at the sending end. The third is a combination of series and shunt termination, where the cable impedance is matched both in series at the sending end and in shunt at the receiving end. The most effective method is the combination, but termination by this method reduces the amount of signal strength at the receiving end to 50% of that which is available in the sending instrument.

To use shunt termination at the receiving end of the cable, connect the 1Ω output of the sending device through 93Ω cable to the input of the receiving instrument. Then use a BNC tee connector to accept both the interconnecting cable and a 100Ω resistive terminator at the input connector of the receiving instrument. Since the input impedance of the receiving instrument is normally 1000Ω or more, the effective instrument input impedance with the 100Ω terminator will be of the order of 93Ω, and this correctly matches the cable impedance.

For series termination, use the 93Ω output of the sending instrument for the cable connection. Use 93Ω cable to interconnect this into the input of the receiving instrument. The 1000Ω (or more) normal input impedance at the input connector represents an essentially open circuit, and the series impedance in the sending instrument now provides the proper termination for the cable.

For the combination of series and shunt termination, use the 93Ω output in the sending instrument for the cable connection and use 93Ω cable. At the input for the receiving instrument, use a BNC tee to accept both the interconnecting cable and a 100Ω resistive terminator. Note that the signal span at the receiving end of this type of receiving circuit will always be reduced to 50% of the signal span furnished by the sending instrument.

For your convenience, ORTEC stocks the proper terminators and BNC tees, or you can obtain them from a variety of commercial sources.

4. OPERATING INSTRUCTIONS *

4.1 PANEL CONTROLS

PULSE HEIGHT – The pulse height potentiometer controls the output pulse height from zero volts to the maximum determined by the attenuation factor toggle switches and the termination load. This 10-turn potentiometer has a calibration linearity of ±0.1%.

NORMALIZE – This 10-turn, 0.25% linearity potentiometer varies the output pulse height continuously over a 2.5 to 1 range (approximately) to allow for normalization of the PULSE HEIGHT dial setting. This control is ineffective when the reference voltage switch is in the EXT position.

RELAY – This switch allows the internal relay to be driven from either the ac line (AC FREQ. position) or the internal oscillator (INT. OSC. position). The frequency of the ac line will be 50 to 60 Hz, and the frequency of the internal oscillator will be approximately 70 Hz. The RELAY switch has a center OFF position which allows the relay to be inoperative while leaving the power on to the pulse-forming circuitry. This position minimizes thermal transients in the pulse forming network.

POLARITY – The polarity of the output signal will be either positive (+) or negative (-) as determined by the setting of the polarity switch. This control is ineffective when the reference voltage switch is in the EXT. position.

ATTENUATION FACTOR – The attenuation switches control pi-attenuators in the attenuated output line. The maximum attenuation is 2000:1. The attenuation factor switches have an accuracy controlled by 0.1% metal film resistors, and depend upon the attenuated output being terminated in 100Ω.

RISETIME – The rise time of the attenuated output signal is controlled by this 6-position switch. The rise time marked on the front panel is elapsed time for amplitude rise from 10 to 90% of the peak value.

INT./EXT. (REFERENCE VOLTAGE) – The INT./EXT. reference voltage switch allows an external reference voltage to be supplied to the mercury relay through the PULSE HEIGHT control. The external reference voltage is supplied through the BNC connector on the rear panel. Any arbitrary voltage can be applied to the external BNC connector, but the maximum voltage should not exceed 20 V (refer to Section 3.3). The POLARITY and NORMALIZE controls have no effect on the output pulse when the switch is set to EXT.

*See Section 6.1 for test performance data on pulse waveforms.

4.2 CONNECTOR DATA

CN1 (DIRECT OUTPUT BNC CONNECTOR) – This is a dc-coupled, unattenuated output which looks back directly at the wiper of the relay and has an output impedance of 100Ω. The output of this connector provides a constant output voltage for a given setting of the PULSE HEIGHT control independent of the position of the RISETIME and ATTENUATION FACTOR switches. Output voltage range is from 0 to 1 V maximum into 100Ω. The direct output may or may not be terminated with a 100Ω terminator. If the output is terminated with a 100Ω terminator, the decay time of the output pulse will change from a nominal value of 400 μs to a value of 200 μs. The polarity of the Direct Output pulse will be either positive (+) or negative (-) as determined by the POLARITY switch.

CN2 (ATTENUATED OUTPUT BNC CONNECTOR) – The attenuated output is a dc-coupled output connector with an output impedance of 100Ω. The attenuated output has in series with it the ATTENUATION FACTOR switches and the RISETIME control switch. The use of these switches therefore alters the pulse shape appearing at the attenuated output for a given setting of the PULSE HEIGHT control. The attenuated output should always be terminated with 100Ω. The polarity of the output pulse will be either (+) or (-) as determined by the POLARITY switch.

CN3 (EXT. REF. BNC CONNECTOR) – The BNC connector on the rear panel provides for the use of an external reference voltage into the 419. The external reference voltage may be any arbitrary waveshape, either dc or a time varying function such as a linear ramp (refer to Section 3.3).

TP1 (DIRECT OUTPUT TEST POINT) – Oscilloscope test point for monitoring signal on the DIRECT OUTPUT BNC Connector, CN1. This test point has a 470Ω series resistor connecting it to CN1.

TP2 (ATTENUATED OUTPUT TEST POINT) – Oscilloscope test point for monitoring signal on ATTENUATED OUTPUT BNC Connector, CN2. This test point has a 470Ω series resistor connecting it to CN2.

TP3 – Ground test point used in conjunction with TP4.

TP4 – The voltage between TP4 and TP3 is the dc voltage selected by the PULSE HEIGHT potentiometer on the front panel. These test points provide a convenient location for continuous monitoring of the reference voltage supplied to the relay and pulse-forming network.

POWER CONNECTOR – Nuclear standard instrument module power connector.

4.3 TYPICAL OPERATING CONSIDERATIONS

VOLTAGE AND CHARGE TERMINATORS

CHARGE TERMINATION A charge terminator which consists of a 100Ω shunt resistor with a 2-pF series capacitor is supplied for use with charge-sensitive preamplifiers such as the ORTEC 109A. When this terminator is used, the maximum output pulse is 1 V or 2 pC (44 MeV for silicon diode detectors). When using the charge terminator to drive charge-sensitive preamplifiers, a coaxial cable having an impedance of approximately 100Ω (RG-62/U) should be used between the pulse generator and the charge terminator. The terminator should be located at the input connector of the preamplifier. The charge terminator may be used with or without a detector connected to the input of a preamplifier. If a detector is connected to the preamplifier, detector bias must be applied to reduce the effective detector capacity shunting the charge-sensitive preamplifier input. Also, with the charge terminator used simultaneously with a semiconductor detector, the charge terminator effectively shunts the detector with approximately 2.5 pF of shunt capacity, which will correspondingly degrade the signal-to-noise performance of the preamplifier.

VOLTAGE TERMINATION For voltage drive to an instrument under test, use coaxial cable having an impedance of approximately 100Ω (RG-62/U) between the pulse generator and the instrument under test. Place a 100Ω termination at the instrument end of the cable in shunt with the input of the instrument.

CALIBRATING TEST PULSER AND AMPLIFIER FOR ENERGY MEASUREMENTS

The 419 pulser may easily be calibrated so that the maximum PULSE HEIGHT dial reading (1000 divisions) is equivalent to a specific MeV loss in a radiation detector. The procedure is as follows:

1. Connect the detector to be used to the spectrometer system; i.e., preamplifier, main amplifier, and biased amplifier.

2. Allow particles from a source of known energy (alpha particles, for example) to fall on the detector.

3. Adjust the amplifier gains and the bias level of the biased amplifier to give a suitable output pulse.

4. Set the pulser PULSE HEIGHT potentiometer at the energy of the alpha particles striking the detector (e.g., for a 5.1-MeV alpha particle, set the dial at 510 divisions).

5. Turn on the pulser. Use the NORMALIZE potentiometer, the RISETIME switch, and the ATTENUATION FACTOR switches to set the output due to the pulser to the same pulse height and shape as the pulse obtained in 3 above. Particular attention to the RISETIME should be given when the collection time of the detector is longer than 10-20 ns.

AMPLIFIER NOISE AND RESOLUTION MEASUREMENTS

As shown in Fig. 4.1, the preamplifier, amplifier, pulse generator, oscilloscope, and a wide-band rms voltmeter, such as the Hewlett-Packard 400D, are required for this measurement. Connect a suitable capacitor to the input to simulate the detector capacitance desired. To obtain the resolution spread due to noise:

1. Measure the rms noise voltage (E_{rms}) at the linear amplifier output.

2. Turn on the 419 pulse generator and adjust the linear amplifier output to any convenient readable voltage, E_O, as determined by the oscilloscope.

3. The full width at half maximum (FWHM) resolution spread due to the amplifier noise is then $N(FWHM) = 2.66\ E_{rms}\ E_{dial}/E_O$, where E_{dial} is the pulser dial reading in MeV, and the factor 2.66 is the correction factor for rms to FWHM (2.35) and noise to rms meter correction (1.13) for average indicating voltmeters such as the Hewlett-Packard 400D. The resolution spread will depend upon the total input capacity, since the capacitance degrades the signal-to-noise ratio much faster than the noise. A typical resolution spread versus external input capacitance is shown in Fig. 4.2.

AMPLIFIER NOISE AND RESOLUTION MEASUREMENTS USING A PULSE HEIGHT ANALYZER

Probably the most convenient method of making resolution measurements is with a pulse height analyzer as shown in Fig. 4.3. The amplifier noise resolution spread can be measured correctly with a pulse height analyzer and the 419 as follows:

1. Select the energy of interest with the 419, and set the linear amplifier and biased amplifier gain and bias level controls so that the energy is in a convenient channel of the analyzer.

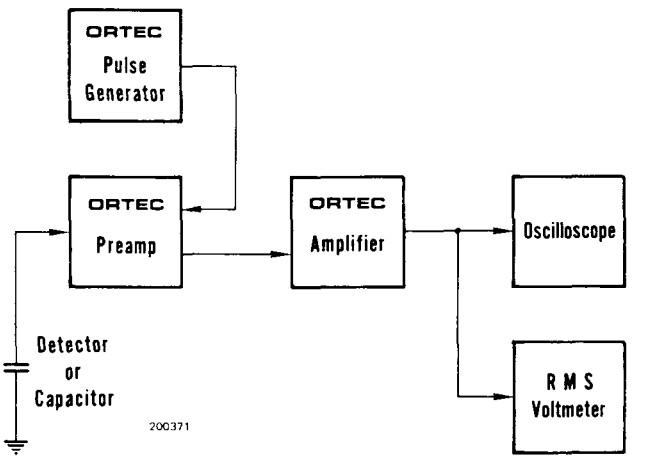

Fig. 4.1. Measuring Amplifier and Detector Noise Resolution.

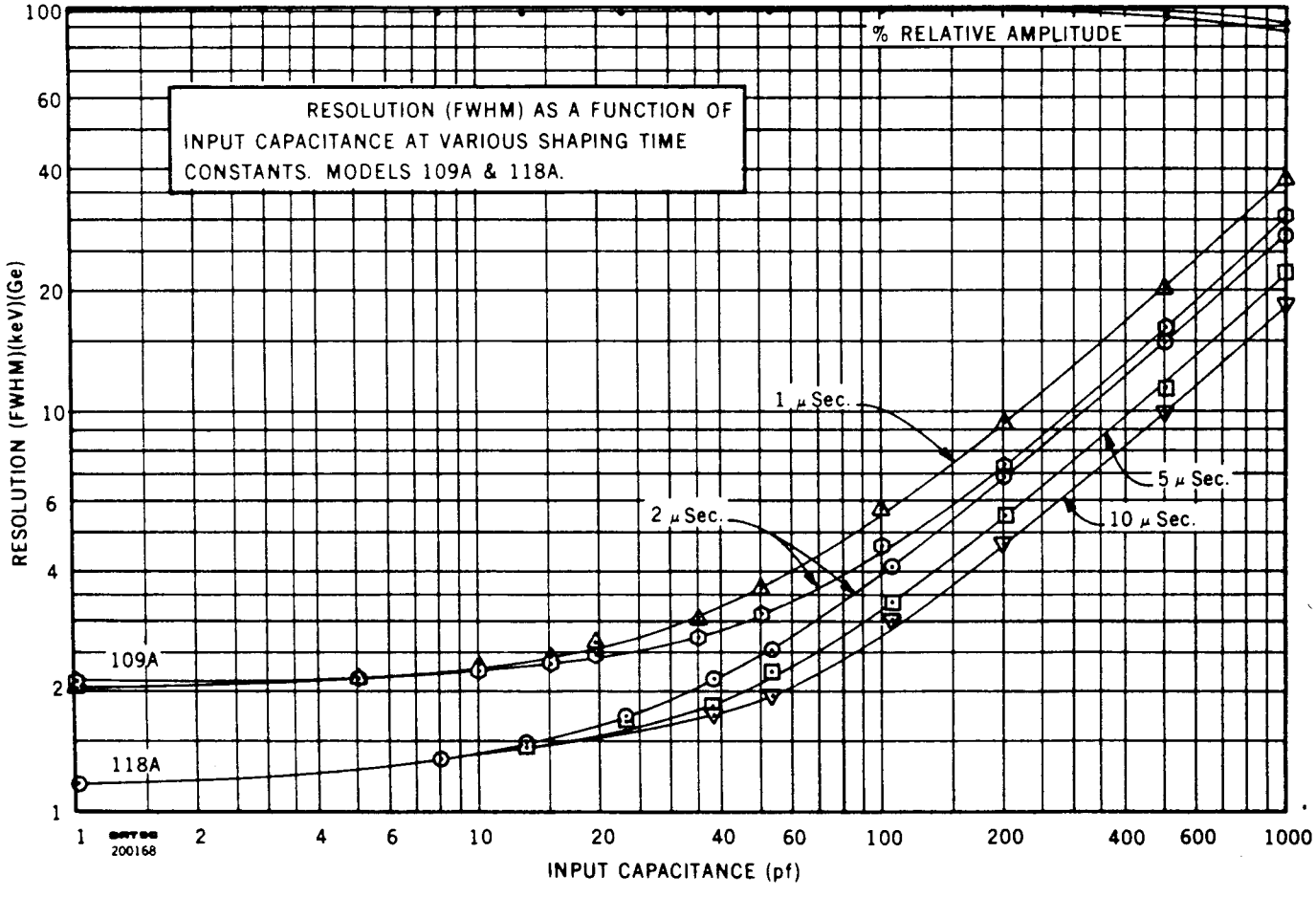

Fig. 4.2. Resolution Spread vs External Input Capacity.

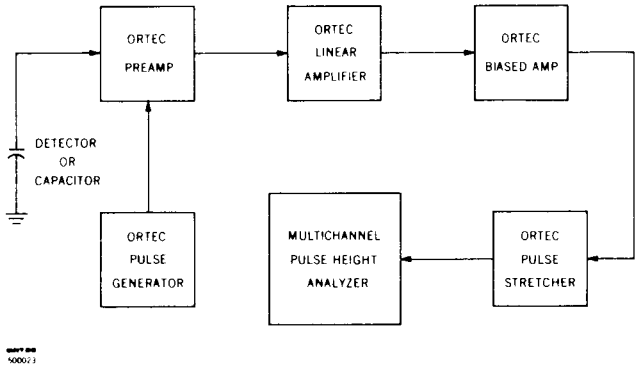

Fig. 4.3. Measuring Resolution with a Pulse Height Analyzer.

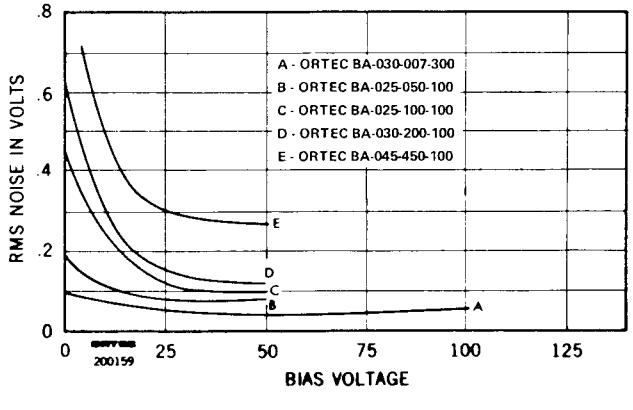

Fig. 4.4. Amplifier and Detector Noise vs Bias Voltage.

2. Calibrate the analyzer in keV per channel, using the pulser. (Full scale on the pulser dial is 10 MeV when calibrated as described in "Calibrating the Test Pulser and Amplifier for Energy Measurements.")

3. The amplifier noise resolution spread can then be obtained by measuring the FWHM of the pulser spectrum. The detector noise resolution spread for a given detector bias can be determined in the same manner by connecting a detector to the preamplifier input. The amplifier noise resolution spread, of course, must be subtracted. The detector noise will vary with detector size, bias conditions, and possibly with ambient conditions, as indicated in Fig. 4.4.

AMPLIFIER LINEARITY MEASUREMENTS

The measurement of amplifier linearity can be quickly and simply done by utilizing the method outlined in Fig. 4.5. The method consists of bucking out two voltage signals from low-impedance sources and measuring the amplitude differential at a null point.

The following conditions of Fig. 4.5 should be considered when making linearity measurements. The output impedance of the DIRECT OUTPUT must be 100Ω. The amplifier must be set in the inverting mode of operation; i.e., for the negative input shown, the amplifier must produce a positive output pulse. The impedance seen from point A to ac, or signal, ground via point C should be equal to the impedance seen from point A to ac, or signal, ground via point B. The diodes D should be germanium units with high G_m. The diodes can be replaced with high-frequency germanium transistors with the base connected to the collector so that the emitter-base functions as the diode.

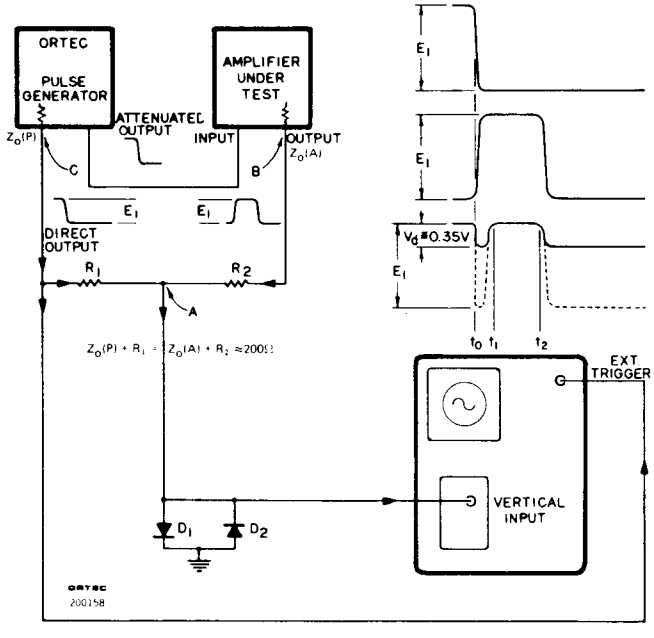

Fig. 4.5. Measuring Linearity by the Null-Balance Method.

Transistors suitable for this test include 2N779, 2N964, 2N976, 2N2048. The diodes serve as bipolar voltage clamps to limit the voltage swing at point A to the forward voltage drop across the diodes. The diode-resistor network should be constructed so as to minimize the stray capacitance around this network. The network should be physically located on the oscilloscope input connector for the same reason.

Initially the output of the pulse generator and amplifier should be set for 10 V. This should be measured with care, and consideration given for the output impedance of both the pulse generator and amplifier. By observing the waveshape at point A (Fig. 4.5), the fine gain of the amplifier and the attenuation controls should be adjusted until a null is obtained between time t_1 and t_2. At null, the sensitivity of the oscilloscope should be set to 10 mV/cm for best resolution of the null measurement.

The actual measurement of linearity is accomplished by dialing the PULSE HEIGHT dial to 0, resulting in the amplifier output being reduced to zero. Since the pulse generator supplies signals in parallel both to the bridge for null and to the amplifier, varying the pulse generator output will have no effect on the null if perfect amplifier linearity is assumed.

As an example of this method, assume that the amplifier under test has essentially zero output impedance. Set R1 equal to 100Ω and R2 equal to 200Ω. Let diodes D1 and D2 be 2N2048 connected as diodes. One-half of the change in the output voltage of the amplifier to be observed at point A results from the attenuation factor of R1 and the output impedance of the DIRECT OUTPUT of the pulse generator, the rest from R2. To specify nonlinearity as a percentage of full output voltage, the calibration of 10 mV/cm will be equal to 10 mV/5 V or 0.2%/cm. Therefore it is seen that 0.1% is quite easily resolved.

In addition to linearity measurements, it is obvious that this method can be quite useful in measurements of temperature stability.

PULSE HEIGHT ANALYZER CALIBRATION

With the pulser calibrated to read directly in terms of energy as described previously, the calibration of a complete spectrometry system from preamplifier to multichannel analyzer, i.e., analog to digital converter (ADC), can readily be accomplished by simply feeding into the preamplifier a calibrated energy signal and observing the corresponding channel into which it is assigned by the ADC. An important consideration in this test involves ensuring that the linear system "goes through zero" and that the output of the pulse generator is properly terminated. The attenuator switches in the 419 have an accuracy controlled by 0.1% metal film resistors and can be used to digitally check the linearity of the spectrometer. In addition to the attenuator accuracy, the PULSE HEIGHT control has independent integral nonlinearity of ±0.1%. This control therefore allows an integral linearity curve of the ADC to be taken over the continuous range of the ADC, i.e., from zero to the maximum address of the ADC. The linearity of the ADC can therefore be determined by having previously taken the linearity curve of the amplifier and preamplifier as outlined in "Amplifier Linearity Measurements."

5. CIRCUIT DESCRIPTION

The mercury-wetted relay RY1 can be driven from either the ac line or the internal oscillator. When driven from the ac line, the ac power is provided through pins 41 and 33 on the rear-panel power connector. Series current-limiting resistors R3 and R4 limit the current through the relay coil to its correct value. The voltage between pins 41 and 33 should be between 105 and 125 V ac, 50 to 60 Hz, for proper operation when the relay switch is at AC FREQ.

The internal oscillator consisting of Q1, Q2, and Q3 provides the driving power when the relay switch S1 is in the INT OSC position. Q1 and Q2 form an astable oscillator, with the output being taken from the collector of Q2. The current driver, Q3, operates either switched on or turned off. When Q3 is on, its collector current is limited by the emitter resistor R38 to approximately 15 mA. The output from the astable oscillator at the collector of Q2 is a constant current pulse due to the high output impedance of the collector of Q2. The parallel combination of R11, C12, and C13 provides an integrating network so that the switching time of Q3 is about 100 μs.

6. MAINTENANCE

6.1 TESTING PERFORMANCE OF THE PULSE GENERATOR

The following paragraphs are intended as an aid in the installation and checkout of the 419. These instructions present information on front-panel controls, waveforms at test points, and output connectors.

Test Equipment

The following, or equivalent, test equipment is needed:

ORTEC 419 Pulse Generator
Tektronix Model 580 Series Oscilloscope
100Ω BNC Terminators
Vacuum Tube Voltmeter
Schematic and Block Diagram for 419 Precision Pulse Generator

Preliminary Procedures

1. Visually check the module for possible damage due to shipment.

2. Connect ac power to nuclear standard bin, ORTEC 401A/402A.

3. Plug module into bin and check for proper mechanical alignment.

4. Switch ac power on and check the dc power supply voltages at the test points on the 402A Power Supply control panel.

Precision Pulse Generator

Set the front-panel controls on the 419 as follows:

1. Relay switch to Internal Oscillator.

2. Polarity switch to (+).

3. Reference switch to INT.

4. The NORMALIZE and PULSE HEIGHT controls to 1000.

5. RISETIME to MIN.

6. All ATTENUATOR switches to down position.

Terminate the direct output in 100Ω. Keep the direct output terminated throughout the test in 100Ω.

Apply power to the nuclear standard bin and listen for the mercury relay running, which will be characterized by a low-frequency hum of about 75 Hz.

Set the relay switch to OFF. Measure the dc voltage from the wiper of the REFERENCE switch on the rear panel to ground. It should be between 1.75 and 2.25 V.

Dial the NORMALIZE control to 000, and again measure the dc voltage from the wiper of the REFERENCE switch to ground. It should be between 0.7 and 0.85 V. Return the NORMALIZE control to 1000.

Set the relay switch to AC FREQ.

Measure the pulse at the direct output test point. The pulse amplitude should be between the limits of 0.9 and 1.2 V. The pulse rise time (10-90%) should be less than 10 ns; the pulse fall time to one-half of its maximum amplitude should be between 230 and 290 μs. Do not remove the 100Ω terminator from the direct output.

Terminate attenuated output with 100Ω. Measure the pulse at the attenuated output test point. The pulse amplitude should be between the limits of 0.9 and 1.2 V. The pulse rise time (10-90%) should be less than 10 ns. The pulse fall time to one-half of its maximum amplitude should be between 110 and 150 μs.

Adjust the PULSE HEIGHT dial for a pulse at the attenuated output test point of 800 mV. As ATTENUATOR switches are switched in, the output pulse should be between the following limits:

	Output Pulse (mV)		
	Original	Lower	Upper
2X	800	360	440
2X	800	360	440
5X	800	144	176
10X	800	72	88
10X	800	72	88

With an 800-mV output pulse at the attenuated test point, measure the 10-90% rise time for all positions of the RISETIME switch. The rise time should be within the following limits:

	Rise Time (ns)	
Switch Setting	Lower	Upper
Minimum	3	10
20	17	23
50	40	60
100	90	110
250	225	295

Set the relay switch to INT OSC. Measure the frequency at the direct output. The frequency limits are 61 to 79 Hz. If a scaler is not available, measure the time between the leading edges of two successive pulses at Q2 emitter. The period should be between 12.6 and 16.4 ms.

Set the POLARITY switch to (-). There should be no change in amplitude from the (+) position. Observe the output with a sweep of 5 ms/cm and look for "skipping" or other erratic behavior of the relay on INT OSC operation.

6.2 ADJUSTMENT OF INTERNAL OSCILLATOR FREQUENCY

The internal oscillator normally oscillates at a frequency of approximately 70 Hz. This frequency may be changed by changing the value of capacitor C2, which is nominally a 6.8-μF capacitor. To decrease the frequency of oscillation, it is necessary to increase the value of the capacitor. Increasing the frequency of oscillation above approximately 80 Hz is not recommended, since the mercury-wetted relay will not operate reliably above this frequency. In the event it is desired to change the frequency of oscillation a small amount, paralleling resistors R8 or R9 with an additional resistor will be found to be satisfactory. The etched circuit board is provided with holes for the addition of such resistors. The frequency should not be changed by more than 10% with this simple expedient. It is frequently desirable to decrease the frequency to a very low level, e.g., 20 Hz, so that the oscillator can run at a very low rate during the collection of experimental data and not overflow in a multichannel analyzer. This should be accomplished by increasing the value of C2.

6.3 ADJUSTMENT OF DECAY TIME OF OUTPUT PULSE

As the 419 is normally supplied, the decay time of the output pulse is essentially fixed. The output pulse will decay with the time constant of 400 μs if the direct output only is terminated in 100Ω and will decay with a time constant of approximately 200 μs if both the direct output and attenuated output are terminated. In the event that a time constant shorter than 200 μs is desired, a fixed resistor should be paralleled from the normally open contact of the mercury-wetted relay to ground. The value of this shunting resistor will depend upon the exponential time constant. The addition of this resistor should physically be in close proximity to the actual relay; that is, the resistor should be added directly onto the etched circuit board. Decay time constants as short as 10 μs can be accomplished quite easily.

6.4 TABULATED TEST POINT VOLTAGES

The following voltages are intended to indicate the typical dc voltages measured on the etched circuit board. In some cases the circuit will perform satisfactorily even though, due to component variations, there may be some voltages that measure outside the given limits. Therefore the voltages given should not be taken as absolute values, but rather are intended to serve as an aid in troubleshooting. All voltages are measured from ground with a vtvm having an input impedance of 10 MΩ or greater. Set polarity switch to (+).

Location	Typical dc Voltages
Q1b	12.0
D1k	9.1

6.5 SUGGESTIONS FOR TROUBLESHOOTING

If the 419 is suspected of malfunctioning, it is essential to verify such malfunctioning in terms of simple pulse generator impulses at the output. In consideration of this, the 419 must be disconnected from its position in any system, and routine diagnostic analysis performed on the pulse generator with a vacuum tube voltmeter and oscilloscope. It is imperative that testing not be performed with any amplifier system until the pulse generator performs satisfactorily by itself. The testing instructions of Section 6.1 of this manual and the circuit description in Section 5 are intended to provide assistance in locating the region of trouble and repairing the malfunction. The guide plate and shield cover can be completely removed from the module to enable oscilloscope and voltmeter observations with a minimum chance of accidentally short circuiting portions of the etched board.

The 419 may be returned to ORTEC for repair service at nominal cost. Our standardized procedure requires that each repaired instrument receive the same extensive quality control tests that a new instrument receives.

BIN/MODULE CONNECTOR PIN ASSIGNMENTS FOR AEC STANDARD NUCLEAR INSTRUMENT MODULES PER TID-20893

Pin	Function	Pin	Function
1	+3 volts	23	Reserved
2	−3 volts	24	Reserved
3	Spare Bus	25	Reserved
4	Reserved Bus	26	Spare
5	Coaxial	27	Spare
6	Coaxial	*28	+24 volts
7	Coaxial	*29	−24 volts
8	200 volts dc	30	Spare Bus
9	Spare	31	Spare
*10	+6 volts	32	Spare
*11	−6 volts	*33	115 volts ac (Hot)
12	Reserved Bus	*34	Power Return Ground
13	Spare	**35	Reset (Scaler)
14	Spare	**36	Gate
15	Reserved	**37	Reset (Auxiliary)
*16	+12 volts	38	Coaxial
*17	−12 volts	39	Coaxial
18	Spare Bus	40	Coaxial
19	Reserved Bus	*41	115 volts ac (Neut.)
20	Spare	*42	High Quality Ground
21	Spare	G	Ground Guide Pin
22	Reserved		

Pins marked (*) are installed and wired in ORTEC 401A and 401B Modular System Bins.
Pins marked (*) and (**) are installed and wired in EG&G/ORTEC–HEP M250/N and M350/N NIMBINS.

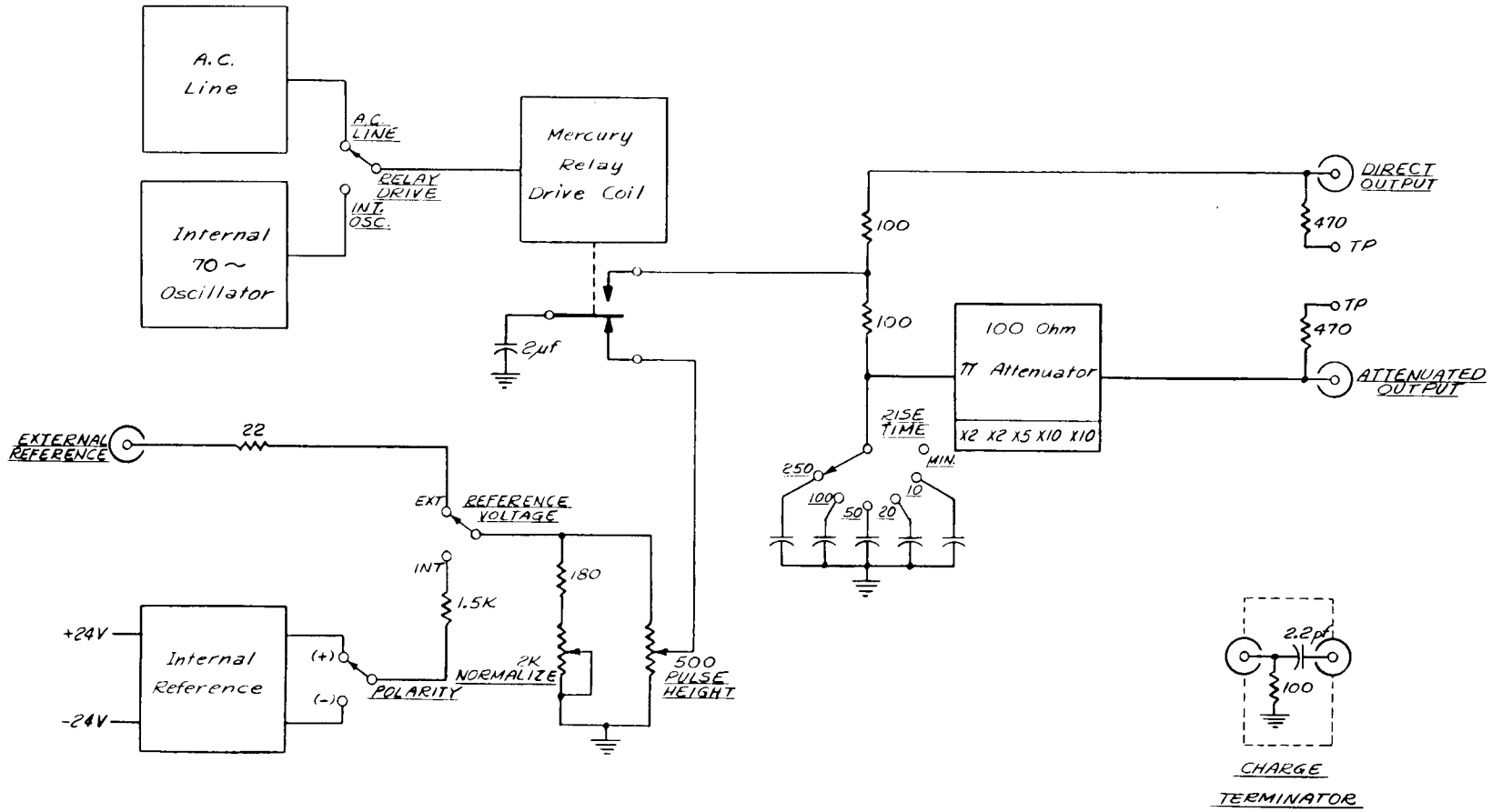

429-0201-B1

OAK RIDGE TECHNICAL ENT
OAK RIDGE, TENN.

MODEL 4
PRECISION PULSE

DATE	NO.	REVISION	BY

DESIGN	DRAWN	DATE	RESP. ENGR.	APPR.	SCALE
B. Scroggs		1-19-66	B. Scroggs	B.S.	

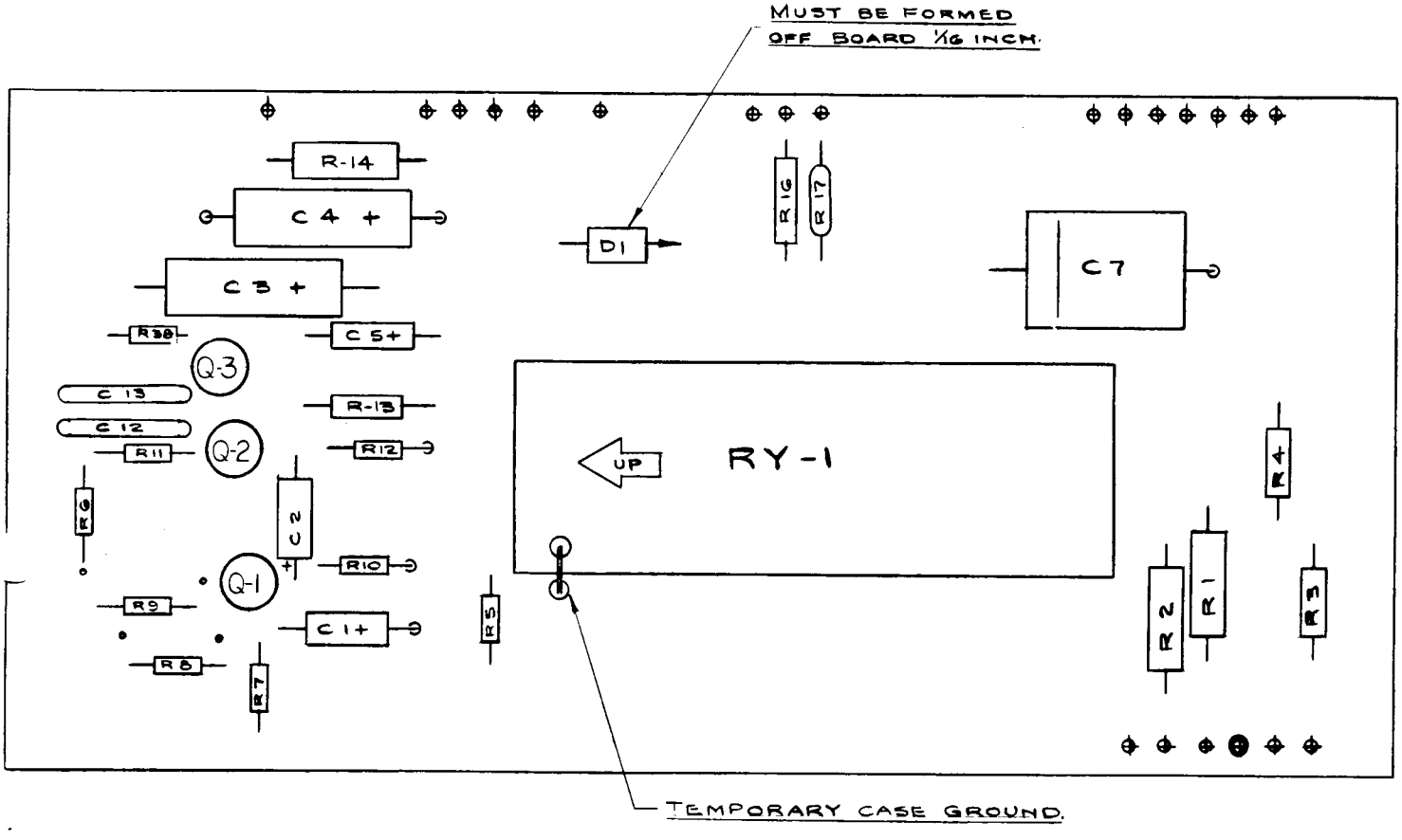

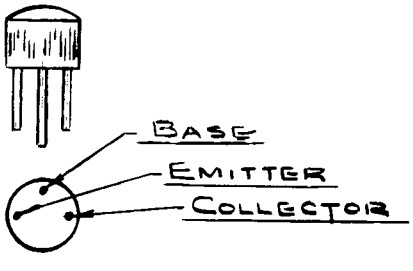

NOTE~
SOLDER ALL THRU
CONNECTION EYELETS

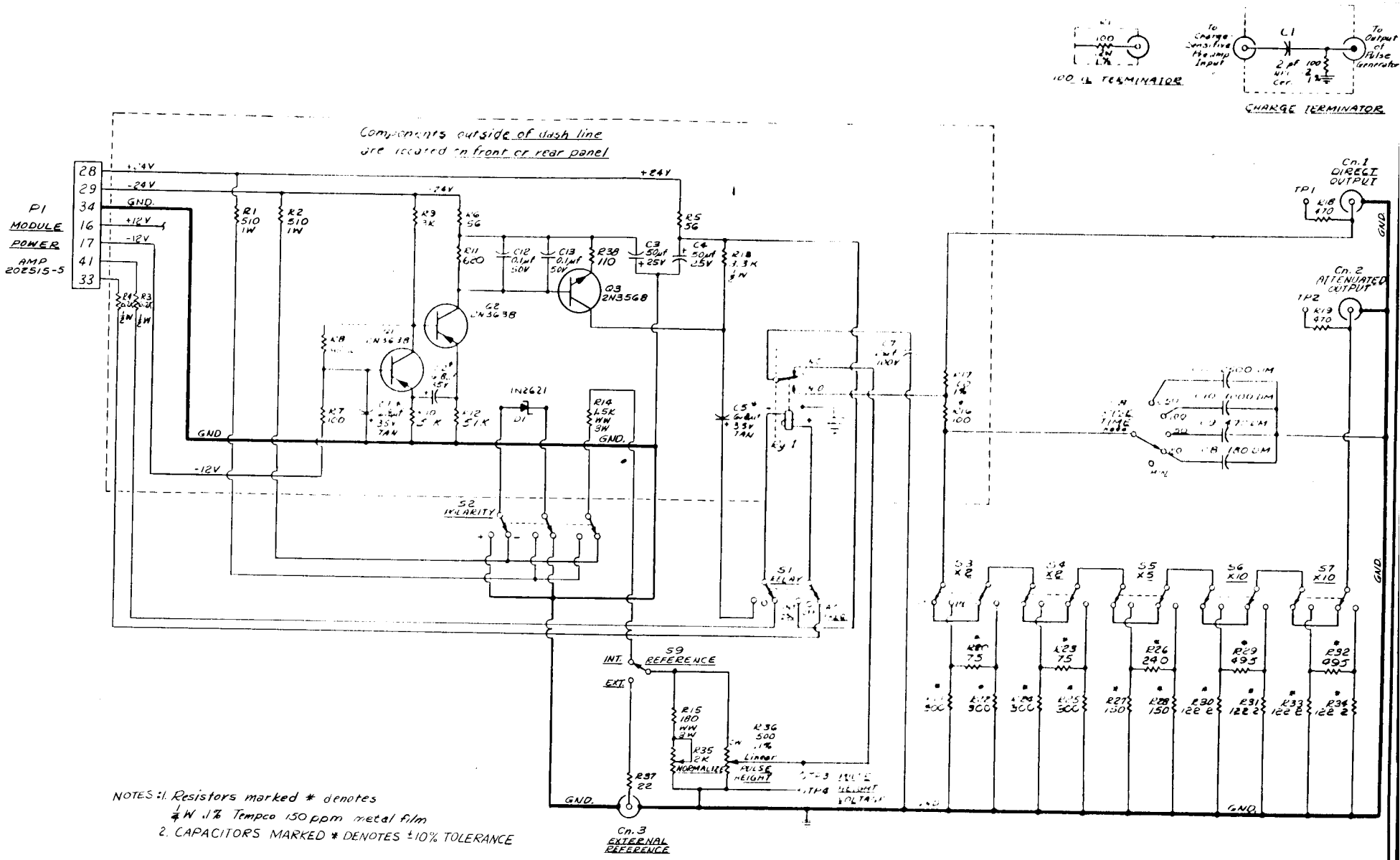

NOTES: 1. Resistors marked * denotes ¼W .1% Tempco 150 ppm metal film
2. CAPACITORS MARKED * DENOTES ±10% TOLERANCE

ECN NO	DATE	BY	APPD
419-13			
419-12			
419-11			
419-10			
419-15			
419-2	5-3		
419-1	4-8-66	JDW	

REVISIONS

UNLESS OTHERWISE SPECIFIED
DIMENSIONS IN INCHES
TOLERANCES
FRACTION ±
DECIMALS ±
ANGLES ±
SURFACE FINISH √ RMS
APPLIED PRACTICES

ORTEC
OAK RIDGE TECHNICAL ENTERPRISES CORPORATION
OAK RIDGE TENNESSEE

TITLE: PULSE GENERATOR

DRAFTSMAN: [signature] DATE: 2-8-66
CHECKED: DATE:
ENG. APPROVAL: [signature]
MFG. APPROVAL:
RESP. ENG.: B. Scroggs
DRAWING NO.: 419-0201-S1

-S8
-Q3
C13
R38