EG&G-ESN

LF 4000

QUAD LOGIC FAN IN/FAN OUT

FEATURES:

* 4X4, 2X8, or 1X16 grouping
* 16 inputs, 24 outputs
* 100 MHz operation

APPLICATIONS:

* Coincidence experiments
* Logic circuit interconnection
* OR gate

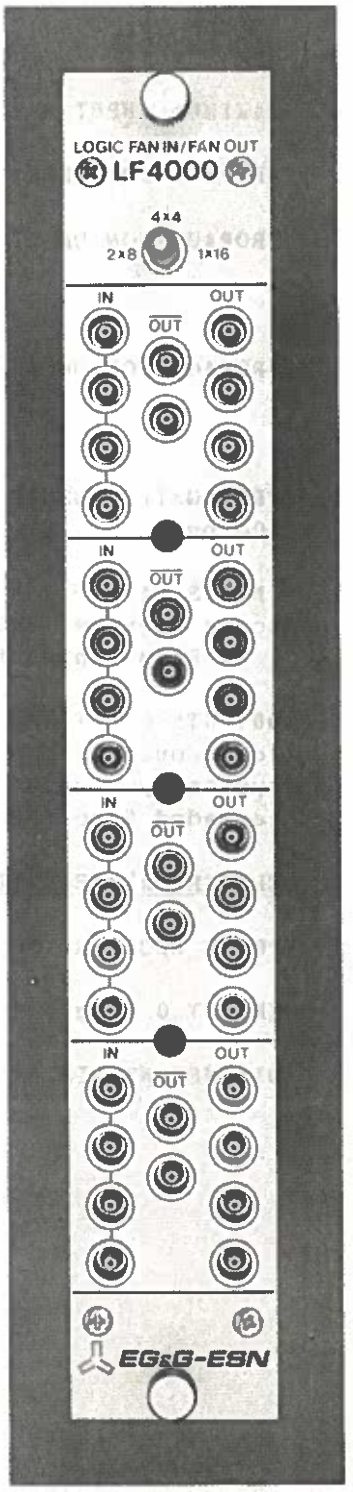

The Model LF4000 Quad Logic Fan In / Fan Out provides a way to interconnect large numbers of logic modules with minimum additional delay time. The unit contains 16 negative Fast-NIM inputs that may be configured as a quad 4-input, 6-output OR gate; a dual 8-input, 12-output OR gate; or as a single 16-input, 24-output OR gate.

A front-panel toggle switch allows the selection of any of the three matrices, 4X4, 2X8, or 1X16. Front-panel LED's indicate when neighboring channels are connected. For every 4 non-inverting outputs there are 2 inverting outputs.

All inputs and outputs are negative Fast-NIM compatible. Care has been taken to minimize the propagation time variation from one channel to another.

SPECIFICATIONS:

NUMBER OF SECTIONS four; can be cascaded by means of front-panel toggle switch (4 X 4, 2 X 8, or 1 X 16 grouping possible).

MAXIMUM INPUT RATE 100 MHz.

PROPAGATION DELAY less than 8 ns.

PROPAGATION DELAY VARIATION BETWEEN INPUTS 4 X 4 : less than 200 ps
2 X 8 : less than 600 ps
1 X 16: less than 1.2 ns

PROPAGATION DELAY VARIATION BETWEEN OUTPUTS 4 X 4 : less than 500 ps
2 X 8 : less than 600 ps
1 X 16: less than 1.2 ns

PROPAGATION DELAY CHANGE DUE TO CHANGING 4 X 4 TO 2 X 8 OR 1 X 16 less than 100 ps.

INPUTS (4 per section) Front-panel LEMO connectors accept negative Fast-NIM logic signals. Minimum amplitude, -400 mV; minimum width, 4 ns FWHM; input impedance, 50 Ohms.

OUTPUTS (OUT and OUT) 4 non-inverting and 2 inverting negative Fast-NIM logic outputs per section. Nominal -16 mA output; risetime and falltime, 3 ns typically; output width is equal to logical OR of all inputs which are cascaded together.

ELECTRICAL/MECHANICAL

POWER REQUIRED -6 V, 980 mA

WEIGHT 0.5 kg

DIMENSIONS NIM single-width module, 3.3x22.1 cm front panel.

TEST PROCEDURES FOR LF 4000

1. Measure current on -6V power line.

Should be 800 mA 0-10%

2. INPUT SIGNALS

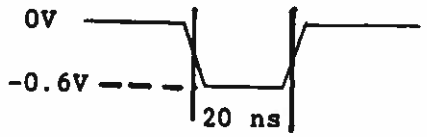

Rise and fall times should be approx. 2 ns. Pulse width 20 ns. Signal is negative -0.6V

Apply signal to NIM 1 input.

Set front panel switch to position "1 x 16"

Monitor testpoint TP 1,(square solder points on solder side of pc-board) ensure that scope probe is grounded, and check for following signal:-

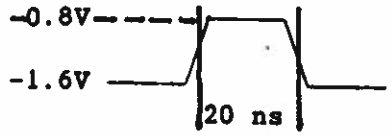

Rise and fall times approx. 2 ns. Pulse width unchanged at 20 ns. Signal level -0.8V to -1.6V

Check for no signal on other outputs.

Continuing monitoring TP 1, apply input signal to the remaining three ch.1 inputs and verify the signal shown.

Repeat this procedure monitoring first TP 5, and then TP 9.

3. Repeat step 2 for channels 2 - 4 as follows:-

All inputs for ch 2 with test points TP 2,6 and 10
All inputs for ch 3 with test points TP 3,7 and 11
All inputs for ch 4 with test points TP 4,8 and 12

4.OUTPUT SIGNALS

Apply input signal as follows to any one of the ch 1 inputs of unit under test

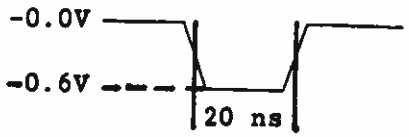

9.12.86

Monitor the first ch 1 "OUT" LEMO connector with an oscilloscope (terminate with 50 Ohm), the following signal should be seen:-

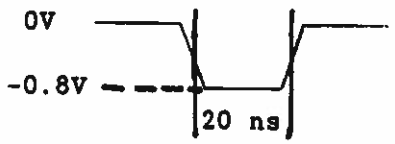

Verify that all four ch 1 "OUT" signals are the same.

Monitor "$\overline{\text{OUT}}$" signals in same way and check for following signal:-

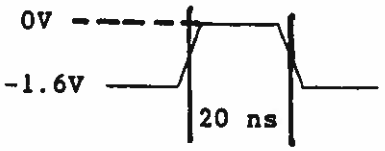

5. Repeat step 4 for the "OUT" and "$\overline{\text{OUT}}$" outputs of ch 2, 3 and 4.

6. Front Panel Switch Operation

a) position "4 x 4"

None of the LED's should illuminate.

Apply input signal (see 1. above) to any input of ch 1.

Monitor the ch 1 "OUT" signal for correct waveform.

Check "OUT" outputs of ch 2, 3 and 4 for NO signal.

If OK, apply input signal to ch 2 and check that NO output signal is present on ch 1, 3 and 4.

Repeat procedure for ch 3 and 4.

b) position "2 x 8"

LED's between (ch 1/ch 2) and (ch 3/ch 4) should illuminate.

Apply input signal to ch 1 as above.

Check for output from "OUT" connectors of ch 1 and ch 2.
Check for NO output on ch 3 and ch 4.

Apply input signal to ch 2.

Check for output from "OUT" connectors of ch 1 and ch 2.
Check for NO output on ch 3 and ch 4.

Apply input signal to ch 3.

Check for output from "OUT" connectors of ch 3 and ch 4.
Check for NO output on ch 1 and ch 2.

Apply input signal to ch 4.

Check for output from "OUT" connectors of ch 3 and ch 4.
Check for NO output on ch 1 and ch 2.

c) position "1 x 16"

All 3 LED's should illuminate.

Apply input signal to ch 1.

Output signals should be present at all 4 channels.

Repeat, moving input signal successively to all four channels.

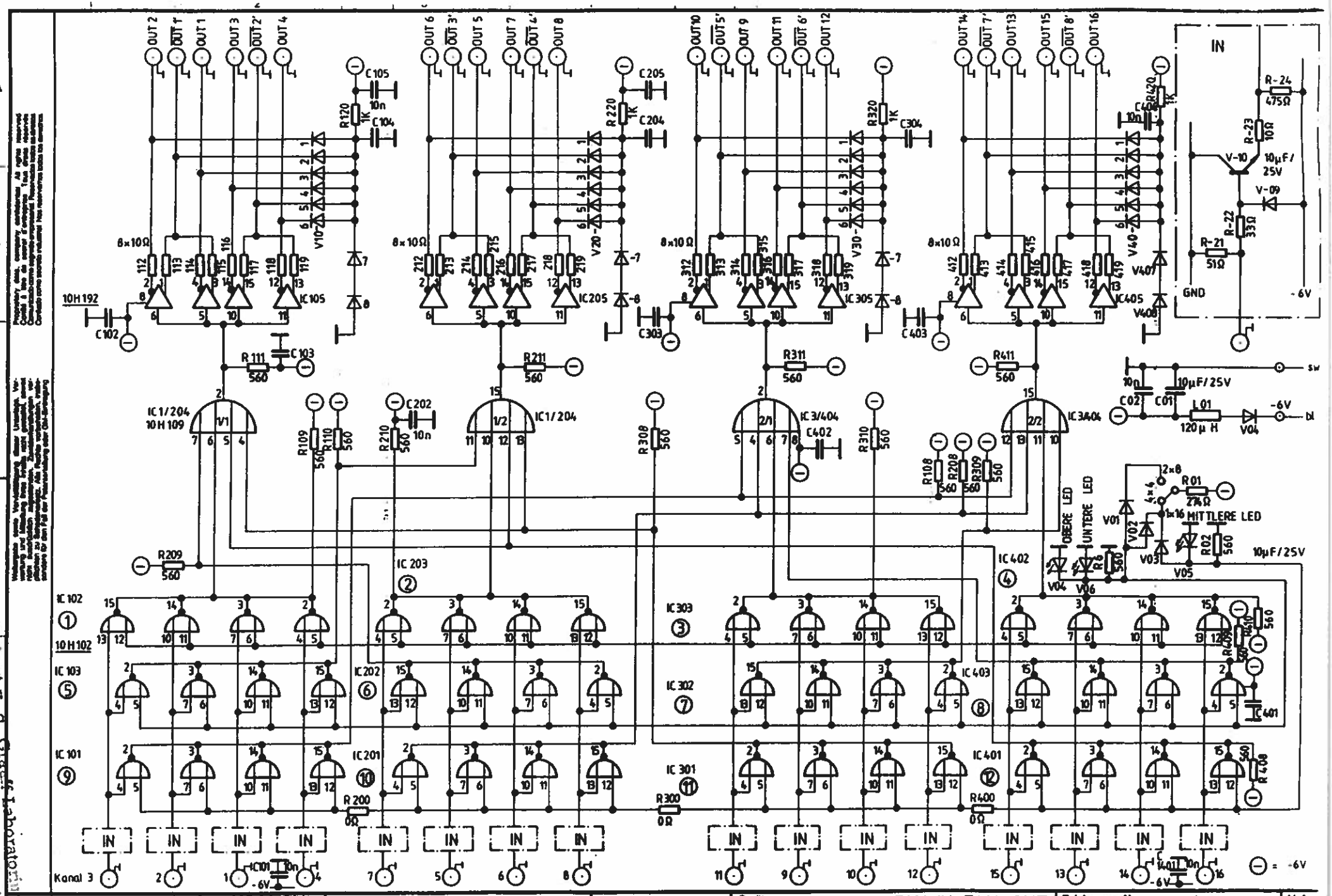

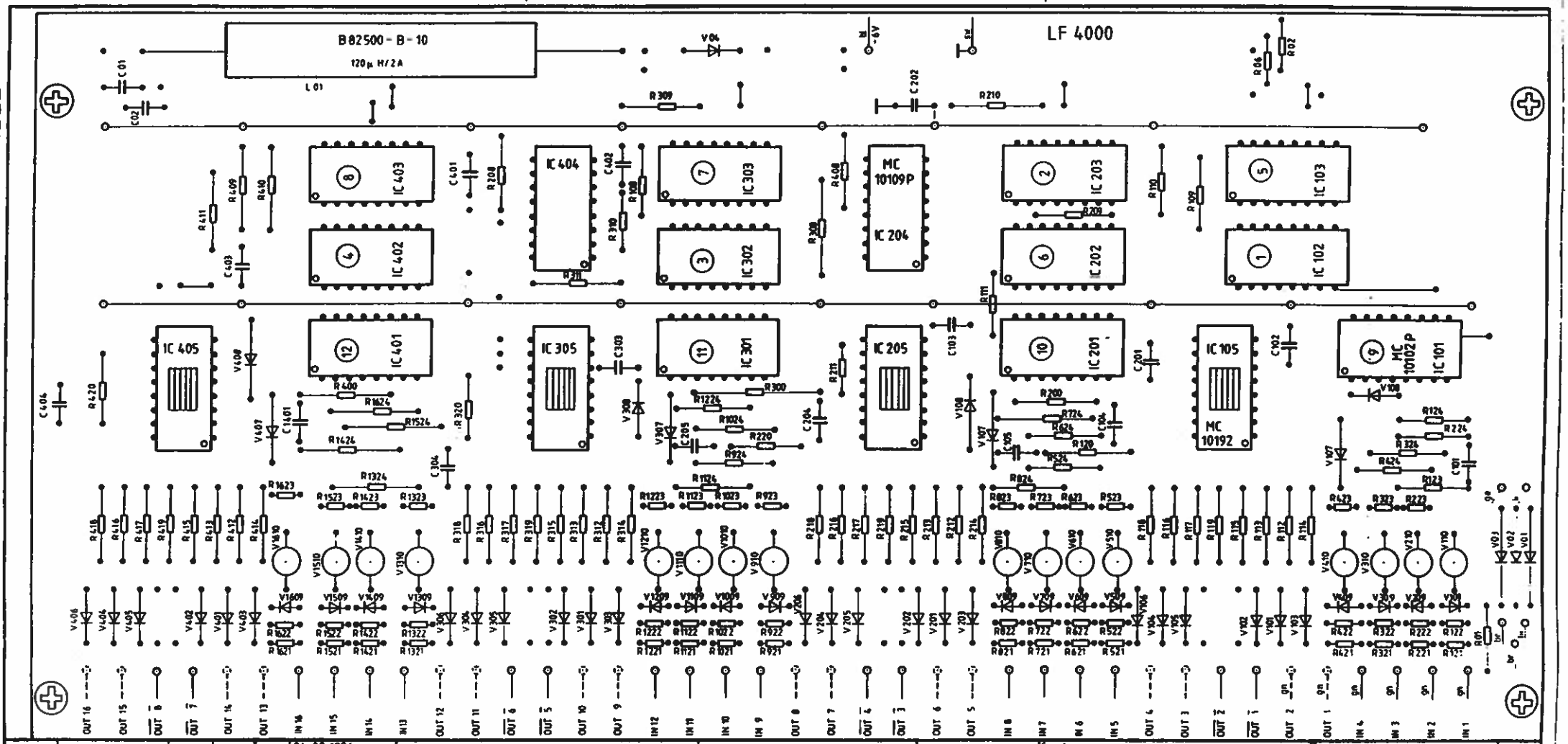

				Datum	04.08.1986	Bestückungsplan		Gerät QUAD LOGIC FAN IN FAN OUT	Zeichnungs-Nr LF4000\20-00	Bl. 2
1	Beschr. R,V,C	11.08.1986		Bearb				LF 4000	KONSTRUKTIONSBÜRO K. WILHELM-BUCKHOLZ	D-6501 JUGENHEIM Silvanerstr. 2
Zustand	Änderung	Datum	Name	Gepr		Urspr./Ers.f./Ers.d.				
				Norm						

POS	QTY	PART #	TYPE	VALUE	FORM	DESCRIPTION	UNIT PRICE	TOTAL PRICE	COMMENTS
16	35	14044	DIODE	1N 4151	RM 10	V01-03,101-108 201-208,301-308 401-408			
17	16	15071	TRANSISTOR	2N 3904		V109,209,309,409,509 609,709,809,909,1009 1109,1209,1309,1409 1509,1609			
18	12	16164	IC	MC 10102P		IC101-103,201-203 301-303,401-403			
19	2	16155	IC	MC 10109P		IC204,404			
20	4	16192	IC	MC 10192L		IC105,205,305,405			
21	64	18029	FEDERPIN	1,02		X03-024,101-110 201-210,301-310 401-410			
22	2	18030	FEDERPIN	1,32		X01,02			
23	1	20010	LEITERPLATTE						LF 4000
24	4	25001	KÜHLKÖRPER			IC105,205,305,405			
25	3	15082	LED GRÜN	3 mm		V04,05,06			
26	40	18012	LÖTÖSE						SUHNER
27	40	18034	APARATEDOSE	1-POL.					GERADE
28	40	18035	ZAHNSCHEIBE						LEMO
29	40	18036	CHROM-MUTTER						LEMO
30	1	18037	KONTAKTTRÄGER						AMP
31	1	18038	ABSCHIRMHAUBE						AMP
32	2	18040	ECKZENTRIERBUCHSE						
33	2	18041	ECKZENTRIERSTIFT						
34	3	18108	LED-HALTERUNG	3 mm					
35	2	18165	STIFTKONTAKT						
36	4	19020	SCHRAUBE	M 2,5 X 8					S-KS-HF
37	4	19017	SCHRAUBE	M 2,5 x 10					KS-HR
38	2	19162	GEWINDENIETBUCHSE						
39	2	19163	RÄNDELSCHRAUBE						
40	4	19276	ISO.-DISTANZHÜLSE	3,2x5mm					
41	1	22053	RÄNDELMUTTER	N1 A					
42	1	19222	KASSETTE	1/12 NIM					
43	1	19235	FRONTPLATTE	1/12 NIM					LF 4000
44	1	22025	SCHALTER	MTL 106E					KNITTEF

Zust.	Änderung	Datum	Name
		30.01.87	

EG&G-ESN

BILL OF MATERIAL:

COMMENTS:

MODULE: LF 4000

DESCRIPTION: QUAD LOGIC FAN IN/FAN OUT

POS	QTY	PART #	TYPE	VALUE	FORM	DESCRIPTION	UNIT PRICE	TOTAL PRICE	COMMENTS
1	33	10027	WIDERSTAND	10 OHM	RM 10	R112-119,212-219 312-319,412-419,123			
2	15	10257	WIDERSTAND	10 OHM	RM 2,5	R223,323,423,523,623 723,823,923.1023 1123,1223,1323,1423 1523,1623			RGU-M
3	16	10236	WIDERSTAND	33 OHM	RM 2,5	R122,222,322,422,522 622,722,822,922,1022 1122,1222,1322,1422 1522,1622			RGU-M
4	16	10234	WIDERSTAND	51 OHM	RM 2,5	R121,221,321,421,521 621,721,821,921,1021 1121,1221,1321,1421 1521,1621			RGU-M
5	1	10078	WIDERSTAND	270 OHM	RM 10	R01			
6	16	10090	WIDERSTAND	470 OHM	RM 10	R124,224,324,424,524 624,724,824,924,1024 1124,1224,1324,1424 1524,1624			
7	1	10094	WIDERSTAND	560 OHM		R209			
8	17	10096	WIDERSTAND	560 OHM	RM 10	R02,06,108-111,208 210,211,308-311 408-411			
9	4	10110	WIDERSTAND	1 K	RM 10	R120,220,320,420			
10	3	10227	WIDERSTAND	SERO OHM		R200,300,400			
11	17	12141	KONDENS.-VIELS.	10nF	RM 2,5	C101-105,201,202,204 205,303,304,401-404 1401,02			
12	1	12184	KONDENS.-TANTAL	10uF/25V	RM 5	C01			
13	1	13004	DROSSEL	120uH		L01			
14	1	14039	DIODE	1N 4007	RM 10	V04			
15	16	14042	DIODE	1N 4151		V109,209,309,409,509 609,709,809,909,1009 1109,1209,1309,1409 1509,1609			

Zust.	Änderung	Datum	Name
		30.01.87	

EG&G-ESN

BILL OF MATERIAL:

COMMENTS:

MODULE: LF 4000

DESCRIPTION: QUAD LOGIC FAN IN/FAN OUT