EG&G-ESN

# DV 8000

## 8 CHANNEL VARIABLE DELAY

**FEATURES:**

* 8 independent channels
* Delay adjustable from 10-50 ns
* Pulse-pair resolution <15 ns
* 2 non-inverting plus one inverting output
* Temperature instability <10 ps/deg. C

**APPLICATIONS:**

* Fast NIM logic delay alignment
* Timing experiments
* Cable delay replacement

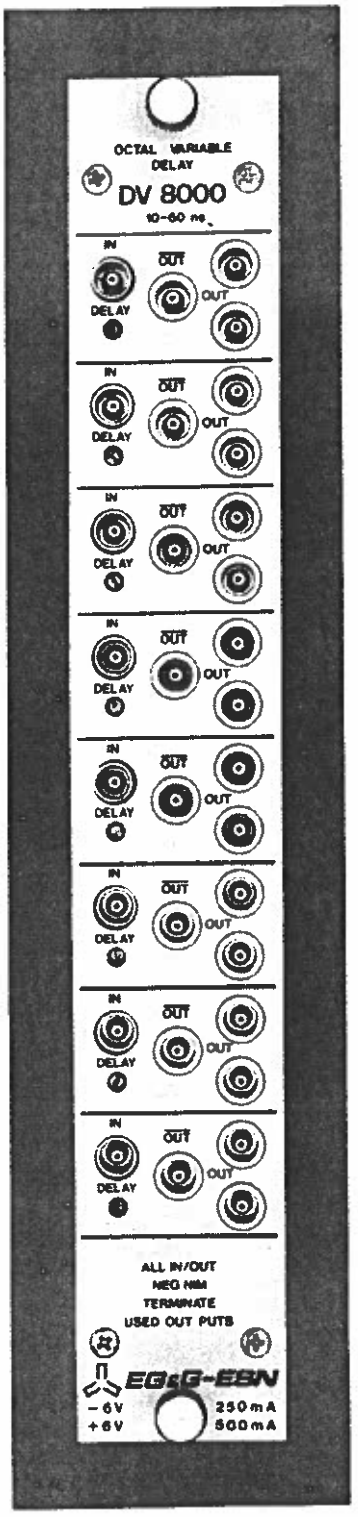


The Model DV8000 Octal Variable Logic Delay provides a compact, reliable delay adjustment for aligning timing experiments. The unit contains 8 continuously variable logic delay circuits in a single-width NIM module.

The DV8000 is useful in applications where delay adjustments must be set with very fine resolution. A front-panel 20-turn screwdriver adjustment allows a delay adjustment range of 10-50 ns per channel.

Inputs must be negative Fast-NIM logic signals. A pair of non-inverting outputs plus one inverting output offer fan-out possibilities.

The Model DV8000 is temperature-compensated to give stability similar to that of a good quality cable. Logic-refresh circuitry in the DV 8000 maintains the logic signal at a strong level.

**SPECIFICATIONS:**

**DELAY ADJUSTMENT** (8 channels) 20-turn front-panel screwdriver adjustments allow precise setting of delay in range of 10-50 ns.

**PULSE PAIR RESOLUTION** less than 15 ns

**DELAY TEMPERATURE INSTABILITY** Less than +/-10 ps/deg. C averaged between 0 and +50 deg. C.

**INPUT** (8 channels) Front-panel LEMO connectors accept negative Fast-NIM logic signals. Minimum amplitude, -400 mV.; minimum width, 10 ns FWHM; Input impedance , 50 Ohms.

**OUTPUT** (OUT and OUT) 2 non-inverting and one inverting negative Fast-NIM logic output per channel. Nominal -16 mA output ; risetime and falltime, 3 ns typically; output width is same as input width.

**ELECTRICAL/MECHANICAL**

**POWER REQUIRED** +6 V, 620 mA
-6 V, 1 mA

**WEIGHT** 0.5 kg

**DIMENSIONS** NIM single-width module, 3.3x22.1 cm front panel.

# DV 8000

## OCTAL VARIABLE DELAY

FOR FAST NIM SIGNALS
(DELAY=18 TO 52 ns )

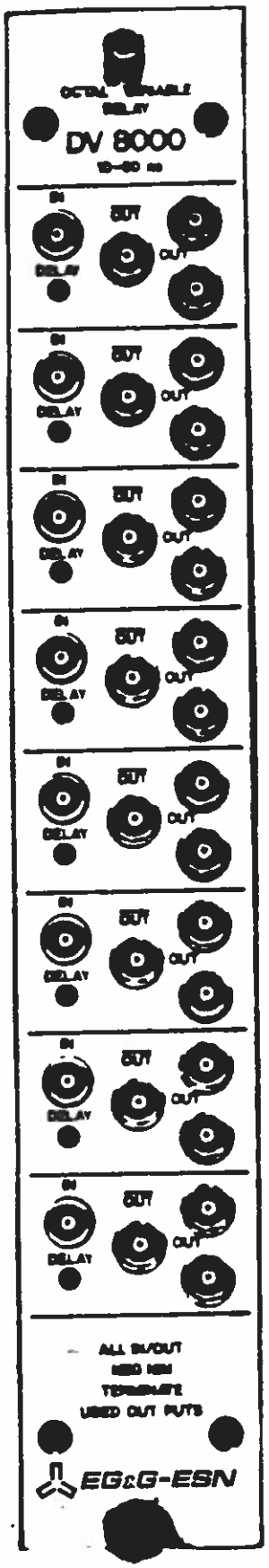


DELAY VARIABLE FROM 18 TO 52ns
VIA FRONT-PANEL SCREWDRIVER-DELAYLINE

FAST NIM INPUT
THRESHOLD -400mV
MINIMUM WIDTH 10 ns
50 TERMINATED

CAUTION: TO AVOID DAMAGE DO NOT OVERWIND SCREWDRIVER DELAYLINE

TWO FAST NIM OUTPUTS
(-16mA=-0,8v IN 50 )
RISETIME 3ns
OUTPUT WIDTH=INPUT WIDTH

ONE COMPLEMENTARY FAST NIM
OUTPUT
(-16mA=- 0,8V IN 50 )
RISETIME
OUTPUT WIDTH=INPUT WIDTH

TERMINATE USED OUTPUTS

TERMINATE DEPENDANCE
6ps /° C

CURRENT REQUIREMENTS -6V AT 620mA
+6V AT 0.5mA

# DV 8000

## OCTAL VARIABLE DELAY

**Specifications:**

- 8 channels of Delay per single width NIM module

- Lemo connectors on front panel

- FAST NIM INPUT (once per channel)
  threshold - 400 mV
  minimum width 10 ns FWHM
  50 Ohm terminated
  direct coupling

- Two FAST NIM OUTPUTS per channel
  - 16 mA = - 0.8 V in 50 Ohm
  risetime 3 ns
  termination of used outputs necessary

- One Complementary FAST NIM Output per channel
  - 16 mA = - 0.8 V in 50 Ohm
  risetime 3 ns
  termination of used outputs necessary

- Delay continuously variable from 18 to 52 ns
  via front panel screw driver delay line ( 40 turn)

- Double pulse resolution less than 15 ns

- Variation of Delay with temperature less than 6 ps/°C

- power requirements

| | |
|---|---|
| - 6 V | 620 mA |
| + 6 V | 0.5 mA |

## Test procedure for DV 8000

1. Measure current on -6V power line.

   Should be approx. 620 mA

   Measure current on +6V power line.

   Should be approx. 0.4 mA

2. Measure voltage on -2V line.

   Should be -1.95V to -2.15V

3. Threshold adjustment.

   a) Input threshold

   Monitor $V_{IN}$ with a DVM and using pot. P1 adjust for -1.15V

   b) Increasing the temperature compensation

   Using DVM, measure resistance between pins 2 & 6 of IC 3130.
   Adjust for 3 kOhm using pot. P3.

   c) Offset for temperature compensation

   Monitor $V_{BB}$ with a DVM and using pot. P2 adjust for -1.35V

4. Input signal

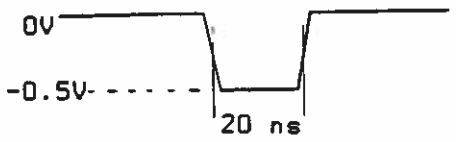


Rise and fall times approx. 2 ns. Pulse width 20 ns. Negative signal, -0.5V.
Input above signal to channel 1. Trigger the oscilloscope with the input signal and look at the signal from connector "OUT".(terminate with 50 Ohm)
Signal shape should be as follows:-

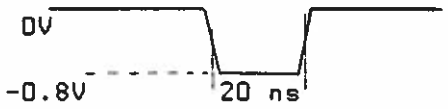


The output signal width should be the same as input signal.
Continuously monitor the output signal and adjust the channel 1 front panel pot. over full range. The delay range should be:-

min. approx. 16 ns
max. approx. 53 ns

Note values for future reference.

Repeat for the second "OUT" output and check that the results are identical.

Repeat procedure for the channel 1 "$\overline{\text{OUT}}$" output. The pulse form should be as follows:-

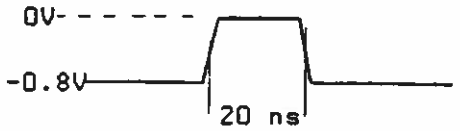


Check over full adjustment range of unit and note results. Delays should be identical to those already ssen.

Repeat entire procedure for channels 2 - 8.

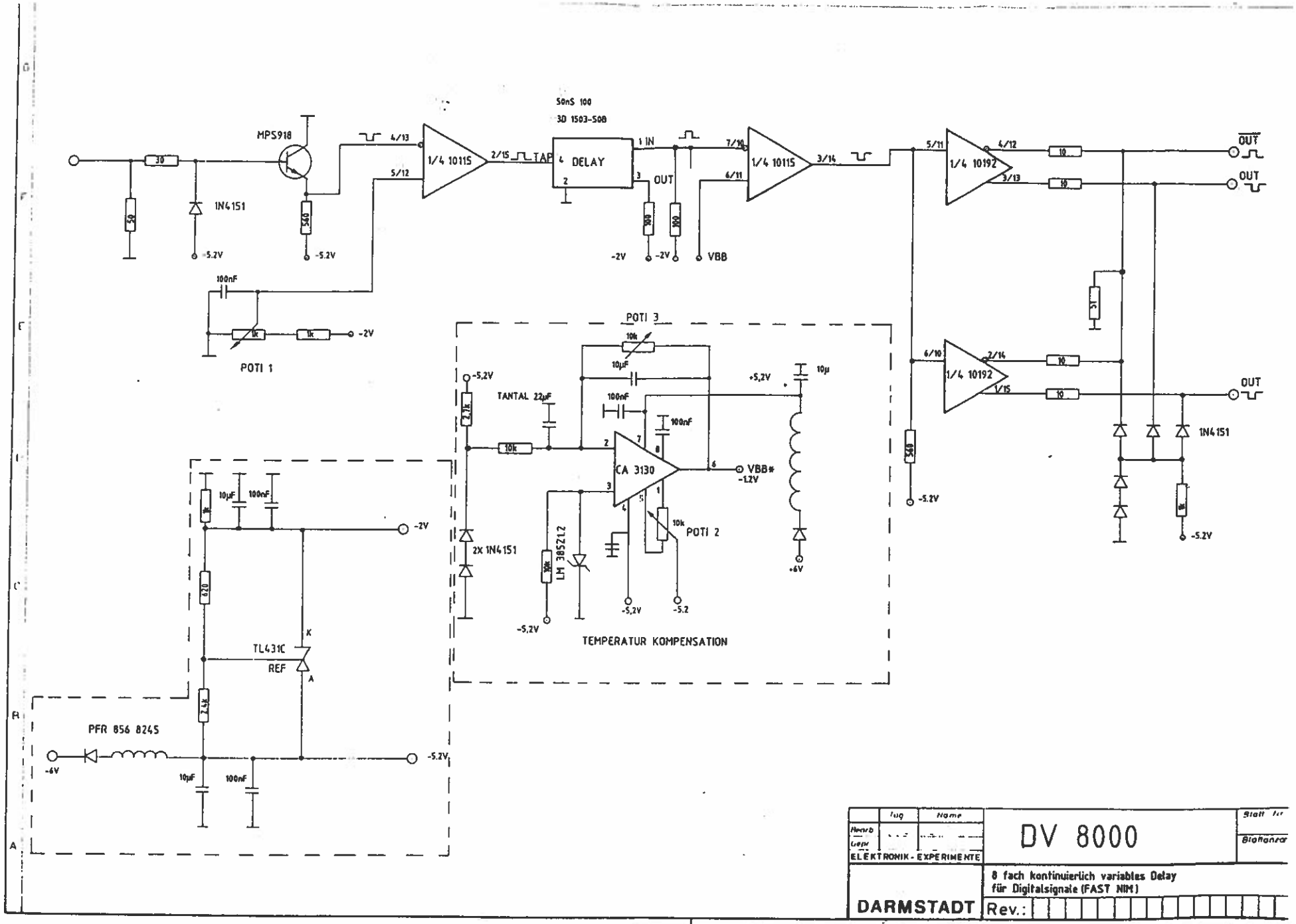


| | Tag | Name | DV 8000 | Blatt Nr. |
|---|---|---|---|---|
| Bearb. | | | | Blattanzahl |
| Gepr. | | | | |
| ELEKTRONIK - EXPERIMENTE | | | 8 fach kontinuierlich variables Delay für Digitalsignale (FAST NIM) | |
| DARMSTADT | | | Rev.: | |

| POS | QTY | PART # | TYPE | VALUE | FORM | DESCRIPTION | UNIT PRICE | TOTAL PRICE | COMMENTS |
|---|---|---|---|---|---|---|---|---|---|
| 1 | 32 | 10027 | WIDERSTAND | 10 OHM | RM 10 | R104-107,204-207<br>304-307,404-407<br>504-507,604-607<br>704-707,804-807 | | | RGU-M |
| 2 | 8 | 10236 | WIDERSTAND | 33 OHM | RM 2,5 | R115,215,315,415<br>515,615,715,815 | | | RGU-M |
| 3 | 8 | 10234 | WIDERSTAND | 51 OHM | RM 2,5 | R116,216,316,416<br>516,616,716,816 | | | RGU-M |
| 4 | 8 | 10051 | WIDERSTAND | 51 OHM | RM 10 | R103,203,303,403<br>503,603,703,803 | | | |
| 5 | 4 | 10231 | WIDERSTAND | 100 OHM | RM 2,5 | R213,413,613,813 | | | |
| 6 | 12 | 10061 | WIDERSTAND | 100 OHM | RM 10 | R109,113,209,309<br>313,409,509,513,609<br>709,713,809 | | | |
| 7 | 4 | 10230 | WIDERSTAND | 560 OHM | RM 2,5 | R114,314,514,714 | | | RGU-M |
| 8 | 12 | 10096 | WIDERSTAND | 560 OHM | RM 10 | R102,202,302,402<br>502,602,702,802,214<br>414,614,814 | | | |
| 9 | 1 | 10099 | WIDERSTAND | 620 OHM | | R011 | | | |
| 10 | 10 | 10110 | WIDERSTAND | 1 K | RM 10 | R101,201,301,401<br>501,601,701,801<br>08,012 | | | |
| 11 | 1 | 10123 | WIDERSTAND | 2K4 | | R010 | | | |
| 12 | 1 | 10134 | WIDERSTAND | 4K7 | | R01 | | | |
| 13 | 2 | 10146 | WIDERSTAND | 10 K | | R02,03 | | | |
| 14 | 18 | 12060 | KONDENS.-VIELS. | 100nF | RM 2,5 | C101/201,301/401<br>501/601,701/801<br>102/202,302/402<br>502/602,702/802<br>103/203,303/403<br>503/603,703/803<br>C02,03,05,06,07,011 | | | |
| 15 | 1 | 12184 | KONDENS.-TANTAL | 10uF/25V | RM 5 | C01 | | | |
| 16 | 3 | 12085 | KONDENS.-TANTAL | 10uF/35V | RM 2,5 | C04,08,010 | | | |
| 17 | 1 | 12089 | KONDENS.-TANTAL | 22uF/25V | RM 2,5 | C09 | | | |
| 18 | 2 | 13002 | DROSSEL | 100uH | | L01,02 | | | |

| Zust | Änderung | Datum | Name |
|---|---|---|---|
| | | 19.4.86 | U/R |

EG&G-ESN

BILL OF MATERIAL:

COMMENTS:

MODULE: DV 8000

DESCRIPTION: Octal Var.Logic Delay

| POS | QTY | PART # | TYPE | VALUE | FORM | DESCRIPTION | UNIT PRICE | TOTAL PRICE | COMMENTS |
|---|---|---|---|---|---|---|---|---|---|
| 19 | 50 | 14044 | DIODE | 1N 4151 | RM 10 | V102-107,202-207<br>302-307,402-407<br>502-507,602-607<br>702-707,802-807<br>05,06 | | | |
| 20 | 1 | 14040 | DIODE | 1N 4007 | RM 10 | V03 | | | |
| 21 | 1 | 14057 | DIODE | PFR 856 | RM 15 | V04 | | | |
| 22 | 1 | 15031 | REFERENZDIODE | LM 385 Z | | V02 | | | |
| 23 | 8 | 15071 | TRANSISTOR | 2N 3904 | | V101,201,301,401<br>501,601,701,801 | | | |
| 24 | 1 | 15040 | SPANNUNGSREGLER | TL 431 C | | V01 | | | |
| 25 | 4 | 16189 | IC | MC 10115 | | IC101/201,301/401<br>501/601,701/801 | | | |
| 26 | 4 | 16192 | IC | MC 10192L | | IC102/202,302/402<br>502/602,702/802 | | | |
| 27 | 1 | 16265 | IC | CA 3130 | | IC01 | | | |
| 28 | 8 | 17004 | DELAY | 50 nSec | | DELAY 1-8 | | | |
| 29 | 1 | 11005 | TRIMM-POTI | 1 K | | P01 | | | |
| 30 | 2 | 11006 | TRIMM-POTI | 10 K | | P02,03 | | | |
| 31 | 56 | 18029 | FEDERPIN | 1,02 | | | | | |
| 32 | 27 | 18030 | FEDERPIN | 1,32 | | | | | |
| 33 | 1 | 20005 | LEITERPLATTE | | | | | | DV 8000 |
| 34 | 4 | 25001 | KÜHLKÖRPER | | | IC102/202,302/402<br>502/602,702/802 | | | MC 10192L |
| 35 | 8 | 18032 | APARATEDOSE | 1-POL. | | BU1-8 | | | ABGEW. |
| 36 | 24 | 18034 | APARATEDOSE | 1-POL. | | | | | GERADE |
| 37 | 24 | 18036 | CHROM-MUTTER | | | | | | LEMO |
| 38 | 24 | 18033 | GOLDHAUBE | | | | | | LEMO |
| 39 | 1 | 18037 | KONTAKTTRÄGER | | | | | | AMP |
| 40 | 1 | 18038 | ABSCHIRMHAUBE | | | | | | AMP |
| 41 | 2 | 18041 | ECKZENTRIERSTIFT | | | | | | |
| 42 | 2 | 18040 | ECKZENTRIERBUCHSE | | | | | | |
| 43 | 3 | 18165 | STIFTKONTAKT | | | | | | |
| 44 | 4 | 19020 | SCHRAUBE | M 2,5 x 8 | | | | | S-KS-HR |
| 45 | 4 | 19045 | SCHRAUBE | M 3 x 18 | | | | | KS-HR |
| 46 | 4 | 19274 | ABSTANDSBOLZE | 3,2 x 10 | | | | | |

| | | | |
|---|---|---|---|
| 15.4.86 | Uz | | |
| Änderungen | Datum | Name | |

EG&G-ESN

BILL OF MATERIAL:

COMMENTS:

MODULE: DV 8000

DESCRIPTION: Octal Var. Logic Delay

| POS | QTY | PART # | TYPE | VALUE | FORM | DESCRIPTION | UNIT PRICE | TOTAL PRICE | COMMENTS |
|---|---|---|---|---|---|---|---|---|---|
| 47 | 4 | 19277 | ABSTANDSBOLZE | 3,2 x 1 | | | | | |
| 48 | 2 | 19162 | GEWINDENIETBUCHSE | | | | | | |
| 49 | 2 | 19163 | RÄNDELSCHRAUBE | | | | | | |
| 50 | 1 | 19231 | FRONTPLATTE | 1/12 NIM | | | | | DV 8000 |
| 51 | 1 | 19222 | KASSETTE | 1/12 NIM | | | | | DV 8000 |

| | | | |
|---|---|---|---|
| | | | |
| | | | |
| | | | |
| | | | |

EG&G-ESN

BILL OF MATERIAL:

COMMENTS:

MODULE: DV 8000

DESCRIPTION:

PAGE: 3 of